OPERATION

OPERATING MANUAL

Rev. 9-21-10

(Software Version: OPER0920)

Coastal Amusements, Inc.
1935 Swarthmore Ave.
Lakewood, NJ 08701
(732) 905-6662
http://www.coastalamusements.com

INTRODUCTION

The coin-operated version of **Operation™** is a licensed product from Warner Bros., based on the universally popular board game. As in the original board game, the player must "extract" a "body part" to win tickets.

The player may select and "extract" any of the body parts. However, one of the body parts is the "Bonus" part, and is signaled by a flashing display. When a player successfully "extracts" the "Bonus" part, the value is multiplied by the declining factor on the center display, and the player is awarded the ticket value x the timer, for a larger progressive type win. *The faster you play, the more you win!*

OPERATION
OPTIONS & SETTINGS

To change settings, press the **ERROR RESET** button located inside the front door.
Operation must be in attract mode to access and change settings.

The **OPTION NUMBER** is displayed on the **POINTS** display.
The **CURRENT VALUE** is displayed in the **BONUS AWARD** display.

Move the joystick **UP** to **INCREASE** the **OPTION NUMBER**.
Move the joystick **DOWN** to **DECREASE** the **OPTION NUMBER**.
Move the joystick **LEFT** to **INCREASE** the **OPTION VALUE**.
Move the joystick **RIGHT** to **DECREASE** the **OPTION VALUE**.

Press the **LOWER FORCEPS** button to **EXIT** and **SAVE** the settings.

OPTIONS & SETTINGS

#	OPTION	RANGE (DEFAULT)	COMENTS
1	COINS PER PLAY	1-8 (**1**)	SETS # OF COINS REQUIRED TO PLAY ONE GAME
2	GAME TIME	10-30 (**15**)	SETS MAX. # OF SECONDS FOR ONE GAME PLAY
3	BONUS MULTIPLIER	5-35 (**10**)	SETS MULTIPLE FOR VALUE OF BONUS "BODY PART"
4	GRACE PERIOD	0-5 (**1**)	SETS # OF SECONDS BEFORE GAME TIME BEGINS
5	TWO BUTTON OPTION	0=OFF; 1=ON (**0**)	PLAYER CAN ONLY MOVE FORWARD ONCE, THEN RIGHT ONCE AND FORCEPS AUTOMATICALLY DROP
6	ATTENDANT PAY	0-900 (**500**)	SETS MAX. # OF TICKETS TO BE PAID DIRECTLY BY GAME
7	FLAT PAY	0=OFF; 1=10 (**0**)	SETS EQUAL VALUES FOR ALL "BODY PARTS"
8	SOUND IN ATTRACT	0=OFF; 1=ON (**1**)	ELIMINATES SOUND WHEN GAME IS NOT BEING PLAYED
9	DEMO MODE (5 TICKET PAY), NO METERS / COIN ERRORS	0=OFF; 1=ON (**0**)	NO COIN(S) NEEDED TO PLAY GAME WILL PAY 5 TICKETS METERS WILL NOT RECORD
10	MERCY TICKETS	0=OFF; 1-10 (**0**)	SETS # OF TICKETS PAID IF NO WINNER RECORDED
11	TICKET SETTING 0: 1-16 TICKETS 1: 5-20 TICKETS 2: 10-25 TICKETS	0, 1, 2 (**1**)	SETS VALUE RANGE OF "BODY PARTS". ALL VALUES WILL BE "SHUFFLED" AND ASSIGNED AT RANDOM
12	BONUS VALUE ALWAYS @ 10	0=OFF; 1=ON (**0**)	SETS VALUE OF BONUS "BODY PART" TO CONSTANT VALUE

NOTE: *To restore factory settings, cycle the AC power while holding both the ERROR RESET and ATTENDANT PAY buttons for at least 5 seconds.*

DIAGNOSTIC MODE

To enter Diagnostic Mode, hold **Attendant Pay** button while powering up the game, until you hear a beep, then release button.

Test 1: The playfield displays will start counting 0-9, and then 10-90 to self-test all of the digits. *This test will repeat until you advance to the next test.*

The **Attendant Pay** button will **advance** you to the next test.

Test 2: The body cavity displays will be numbered from 1 to 13 in a U-shaped pattern to make sure that they are wired correctly.

Test 3: Will light the 'rim' of each cavity on the playfield, starting at 'brain freeze' and working down and up in a u-shaped pattern. *This test will also repeat until you advance to the next test*.

Test 4:

(1) Will light up the 13 back board lights, one at a time, starting at WRITER'S CRAMP moving counterclockwise to BROKEN HEART;
(2) then the nose light;
(3) the front corner LED strips;
(4) and playfield border LED strips all at once. *Again, this test will keep cycling until you proceed to the next one.*

Test 5: Will light up the TIME, MULTIPLIER, and SCORE displays on the head. They will all count 0-9 and 10-90, then the SCORE display will count 100-900.

Test 6: Pressing attendant pay again will show 14, 15, and 16 in those same displays from left to right.

Test 7: Will light up the timer column LED's and turn rows off one by one starting at the top working downward.

Test 8: The final test will check the gantry, the playfield cavities, the coin mechs, ticket dispenser, joystick, switches and meters.

(1) Use the **joystick** to move the **gantry** in any direction and test the **limit switches**.
(2) Press the '**drop' button** to test the **up/down motor and up/down limit switches**.
(3) **Insert a coin** to **advance the coin meter** by one and display either a 1 or a 2 depending on which mech is used.
(4) Press the **Error Reset** button to **increment the ticket meter** by 3 and dispense 3 tickets. It will also display a 3 on the top display.
(5) Test the playfield by hooking a wire to GND (the forceps are connected to GND) and touching the bottom of each cavity. The LED's around the cavity should light up and you should hear a 'winner' sound. If you touch the outer rim of a cavity, the nose should light up and you should hear the 'loser' buzzer.

ERROR CODES

When you power up the game and you only see the 'BRAIN FREEZE' light flashing on the back panel, then there is a TWI communication error.

If you see Er on the POINTS display, and 0 on the MULTIPLIER display, then the gantry did not return to the home position or at least one of the limits switches is not being read.

CORD WINDING

It is possible that the cord connecting the forceps may unwind all the way and wind back up in the opposite direction. If you think that may be the case, compare your gantry to the pictures below:

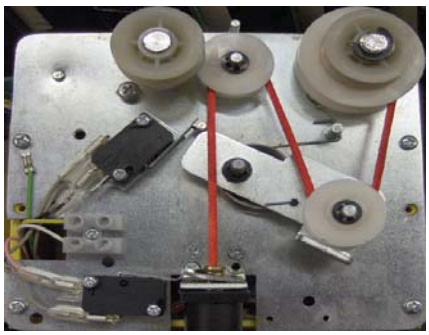

CORRECT WINDING

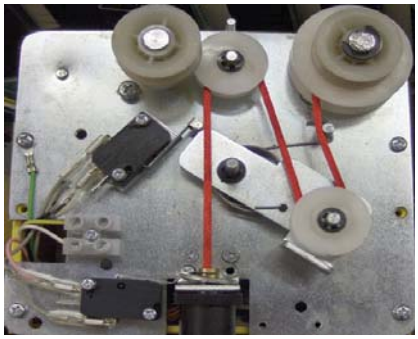

INCORRECT WINDING

Technical Documentation

Jumper Positions For Displays	7
Main Wire Diagram	8
Playfield Display And Cavity Detail	9
I/O PCB	10-14
Sound PCB	15-18
Playfield Seven Segment Display PCB	19-20
Score Seven Segment Display PCB	21-22
Column Driver PCB	23-24
Brain Freeze PCB	25-26
Adam’s Apple PCB	27-28
Broken Heart / Wishbone PCB	29-30
Funny Bone PCB	31-32
Spare Rib PCB	33-34
Butterflies In Stomach PCB	35-36
Writer’s Cramp PCB	37-38
Bread Basket PCB	39-40
Charlie Horse / Ankle Bone Connected to Knee Bone PCB	41-42
Water On The Knee / Wrenched Ankle PCB	43-44
Backboard LED PCB	45
Thermometer Column PCB	46-47
Corner Lighting PCB	48

JUMPER POSITIONS FOR OPERATION DISPLAYS

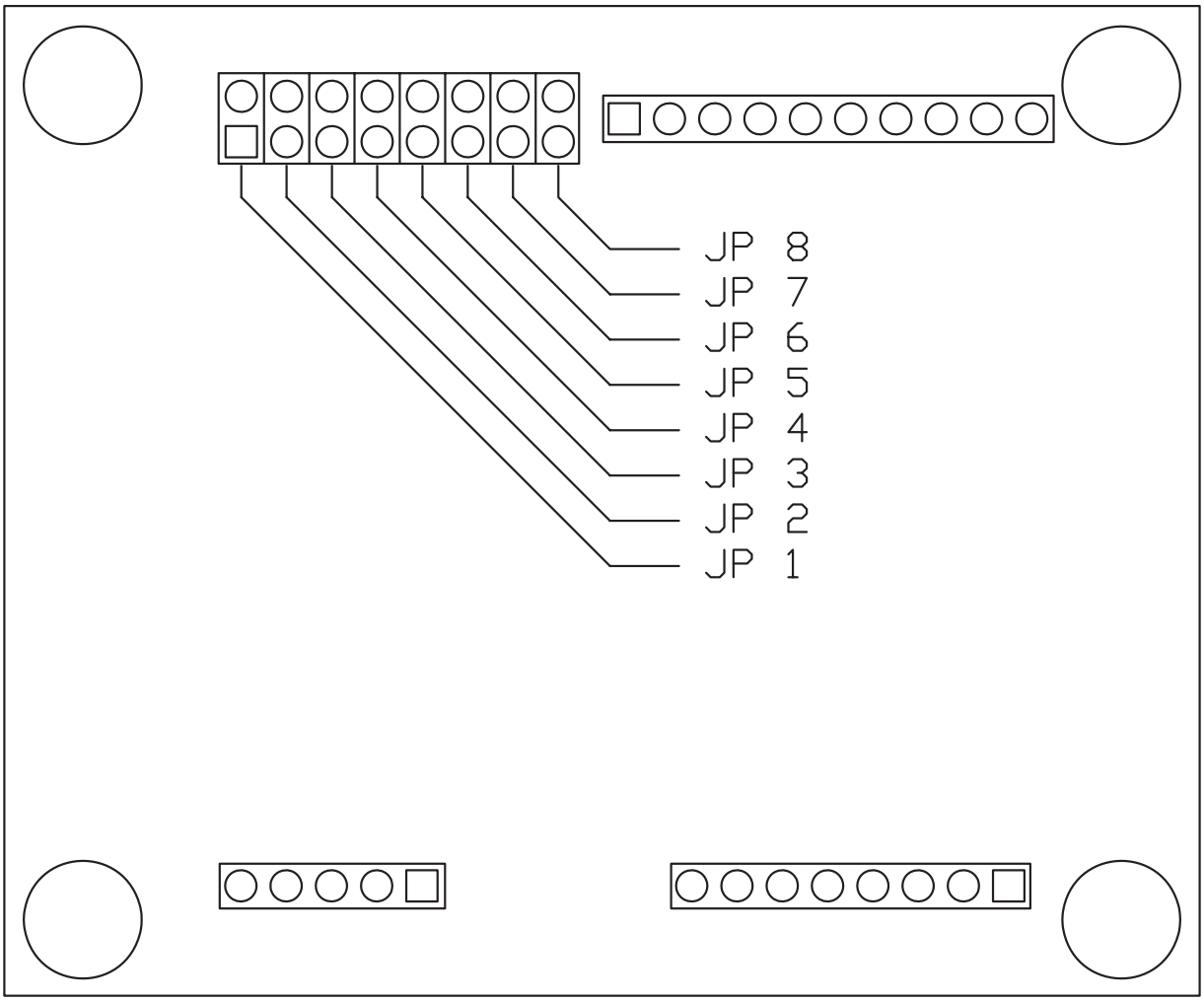

BRAIN FREEZE - JP 2 & JP 7
ADAM'S APPLE - JP 3 & JP 8
BROKEN HEART - JP 4 & JP 8
WRITER'S CRAMP - JP 1 & JP 8
BUTTERFLIES IN STOMACH - JP 2 & JP 8
WATER ON THE KNEE - JP 3 & JP 5
WRENCHED ANKLE - JP 4 & JP 5
ANKLEBONE CONNECTED TO KNEEBONE - JP 1 & JP 5
CHARLIE HORSE - JP 2 & JP 5
BREAD BASKET - JP 3 & JP 6
SPARE RIBS - JP 4 & JP 6
FUNNY BONE - JP 1 & JP 6
WISH BONE - JP 2 & JP 6

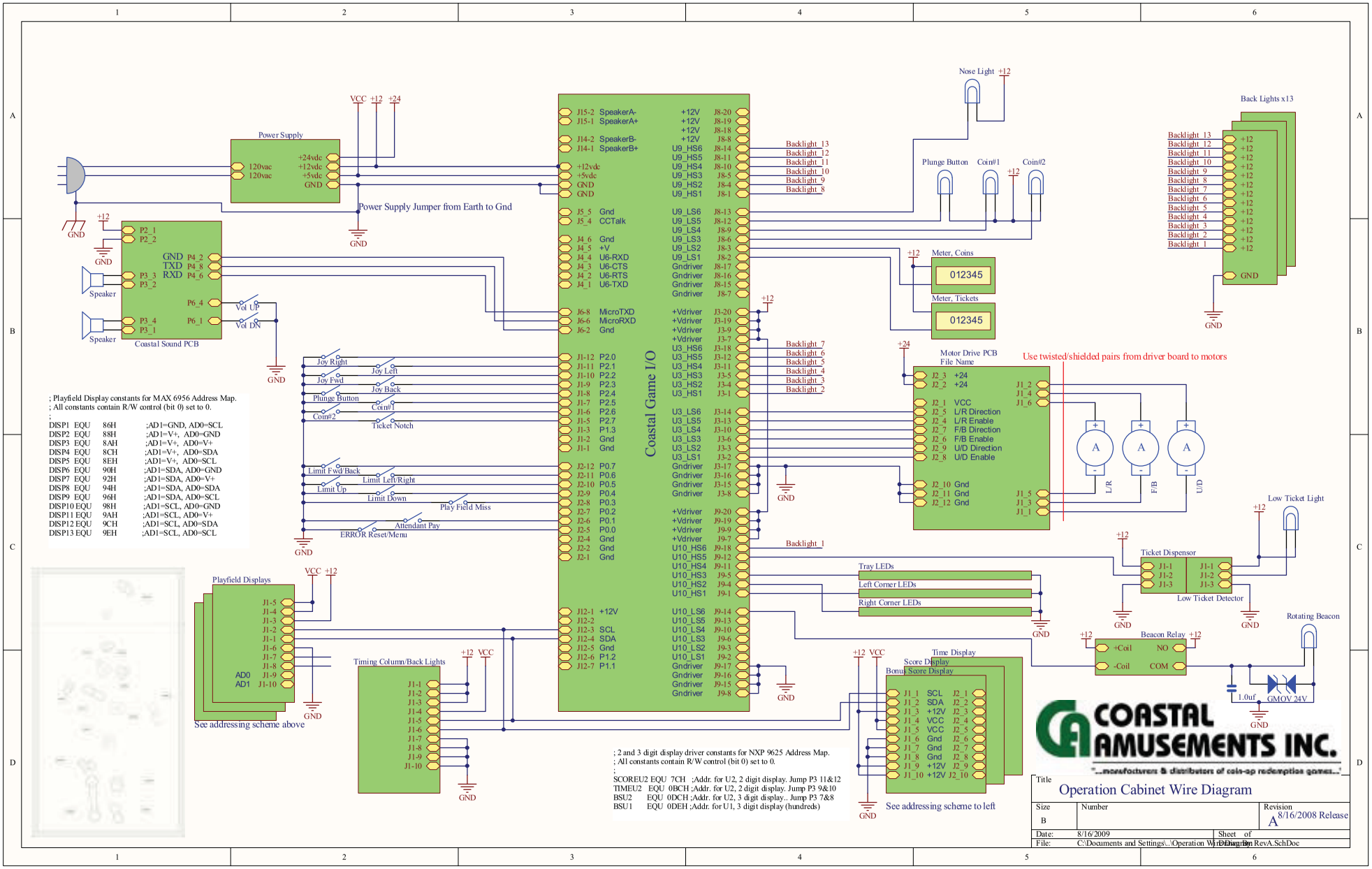
Power Supply
120vac
120vac
+24vdc
+12vdc
+5vdc
GND
VCC +12 +24
Power Supply Jumper from Earth to Gnd
Coastal Sound PCB
Speaker
Vol UP
Vol DN
Coastal Game I/O
Nose Light
Back Lights x13
Plunge Button
Coin#1
Coin#2
Meter, Coins
Meter, Tickets
012345
Motor Drive PCB
File Name
Use twisted/shielded pairs from driver board to motors
L/R
F/B
U/D
Low Ticket Light
Ticket Dispensor
Low Ticket Detector
Rotating Beacon
Beacon Relay
GMOV 24V
1.0uf
Tray LEDs
Left Corner LEDs
Right Corner LEDs
Joy Right
Joy Left
Joy Fwd
Joy Back
Plunge Button
Coin#1
Coin#2
Ticket Notch
Limit Fwd/Back
Limit Left/Right
Limit Up
Limit Down
Play Field Miss
Attendant Pay
ERROR Reset/Menu
Playfield Displays
See addressing scheme above
Timing Column/Back Lights
Time Display
Score Display
Bonus Score Display
See addressing scheme to left
; Playfield Display constants for MAX 6956 Address Map.
; All constants contain R/W control (bit 0) set to 0.
DISP1 EQU 86H ;AD1=GND, AD0=SCL
DISP2 EQU 88H ;AD1=V+, AD0=GND
DISP3 EQU 8AH ;AD1=V+, AD0=V+
DISP4 EQU 8CH ;AD1=V+, AD0=SDA
DISP5 EQU 8EH ;AD1=V+, AD0=SCL
DISP6 EQU 90H ;AD1=SDA, AD0=GND
DISP7 EQU 92H ;AD1=SDA, AD0=V+
DISP8 EQU 94H ;AD1=SDA, AD0=SDA
DISP9 EQU 96H ;AD1=SDA, AD0=SCL
DISP10 EQU 98H ;AD1=SCL, AD0=GND
DISP11 EQU 9AH ;AD1=SCL, AD0=V+
DISP12 EQU 9CH ;AD1=SCL, AD0=SDA
DISP13 EQU 9EH ;AD1=SCL, AD0=SCL
; 2 and 3 digit display driver constants for NXP 9625 Address Map.
; All constants contain R/W control (bit 0) set to 0.
SCOREU2 EQU 7CH ;Addr. for U2, 2 digit display. Jump P3 11&12
TIMEU2 EQU 0BCH ;Addr. for U2, 2 digit display. Jump P3 9&10
BSU2 EQU 0DCH ;Addr. for U2, 3 digit display.. Jump P3 7&8
BSU1 EQU 0DEH ;Addr. for U1, 3 digit display (hundreds)
COASTAL AMUSEMENTS INC.
"...manufacturers & distributors of coin-op redemption games..."
Title
Operation Cabinet Wire Diagram
Size
B
Number
Revision
A 8/16/2008 Release
Date: 8/16/2009
Sheet of
File: C:\Documents and Settings\...\Operation Wire Diagram RevA.SchDoc

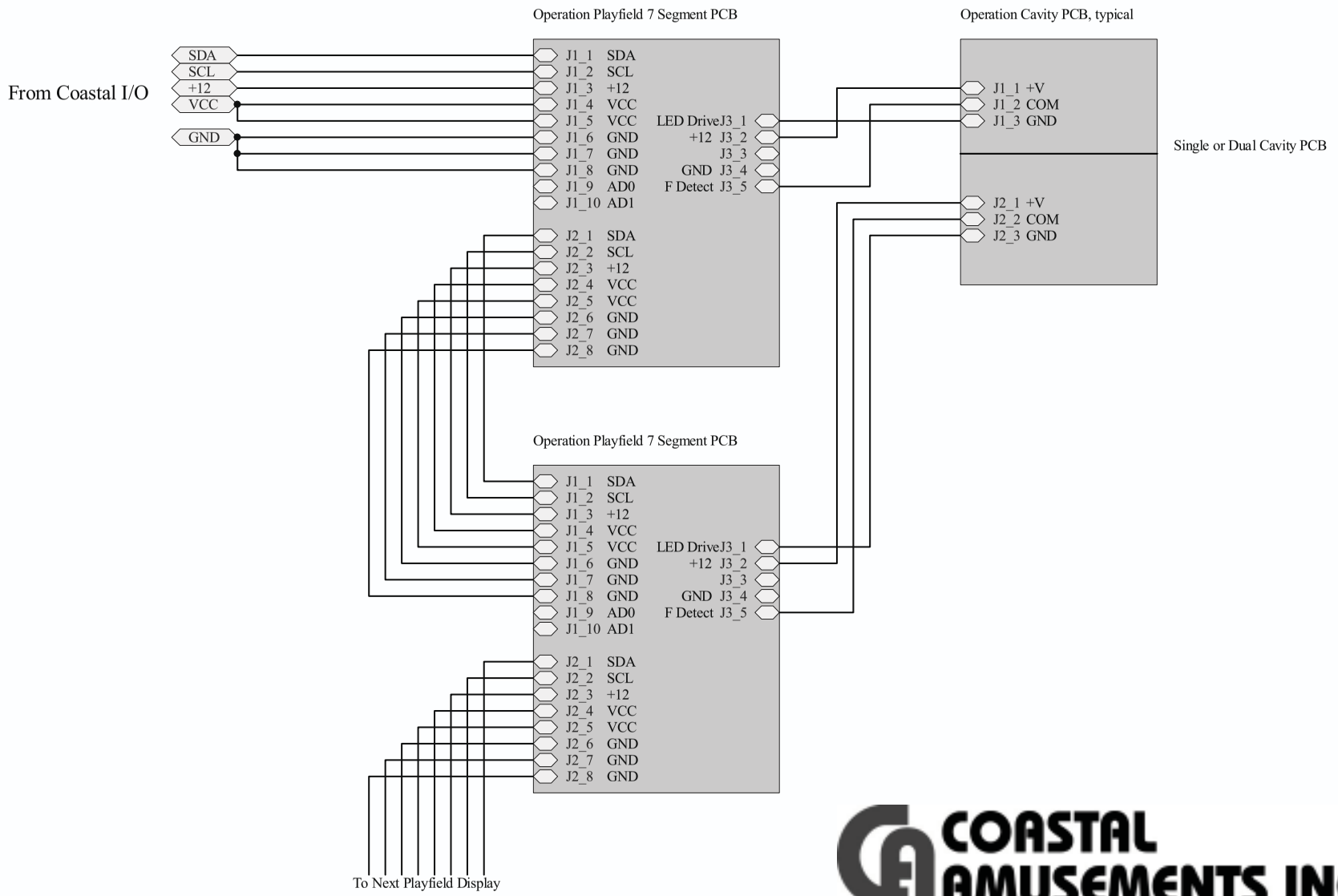

COASTAL AMUSEMENTS INC.

"...manufacturers & distributors of coin-op redemption games..."

Title: Operation Playfield Display Detailed Wire Diagram		
Size: A	Number	Revision: A
Date: 12/9/2008		Sheet of
File: C:\Documents and Settings\...\Operation Wire Diagram Playfield Detail RevA.SchDoc		Drawn By:

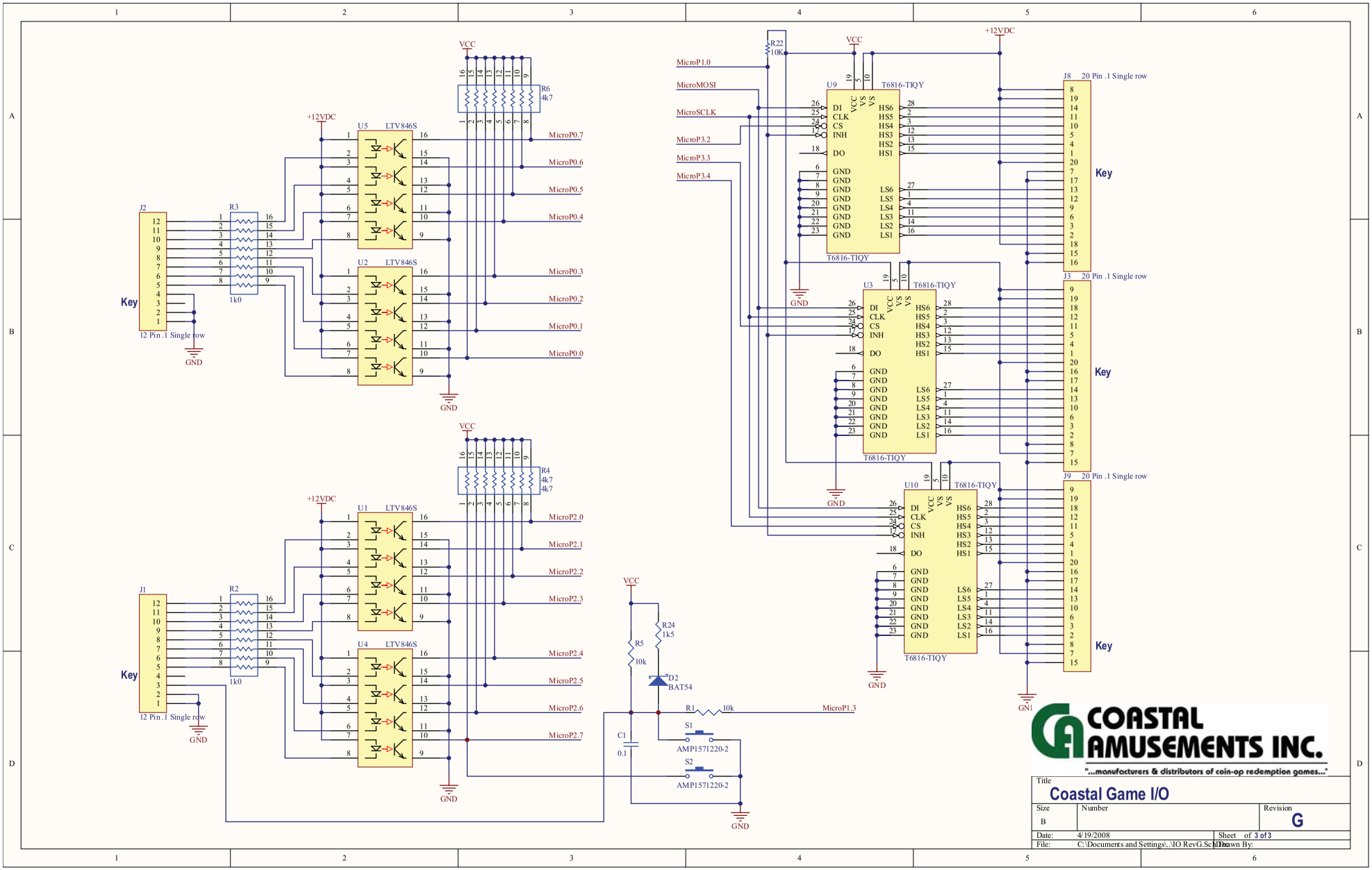
J2
12 Pin .1 Single row
Key
R3
1k0
U5 LTV846S
U2 LTV846S
R6
4k7
VCC
+12VDC
GND
MicroP0.7
MicroP0.6
MicroP0.5
MicroP0.4
MicroP0.3
MicroP0.2
MicroP0.1
MicroP0.0
J1
R2
U1 LTV846S
U4 LTV846S
R4
4k7
4k7
MicroP2.0
MicroP2.1
MicroP2.2
MicroP2.3
MicroP2.4
MicroP2.5
MicroP2.6
MicroP2.7
R5
10k
R24
1k5
D2
BAT54
C1
0.1
R1
10k
MicroP1.3
S1
AMP1571220-2
S2
AMP1571220-2
R22
10K
MicroP1.0
MicroMOSI
MicroSCLK
MicroP3.2
MicroP3.3
MicroP3.4
U9
U3
U10
T6816-TIQY
DI
CLK
CS
INH
DO
GND
HS6
HS5
HS4
HS3
HS2
HS1
LS6
LS5
LS4
LS3
LS2
LS1
J8 20 Pin .1 Single row
J3 20 Pin .1 Single row
J9 20 Pin .1 Single row
COASTAL AMUSEMENTS INC.
"...manufacturers & distributors of coin-op redemption games..."
Title
Coastal Game I/O
Size
B
Number
Revision
G
Date: 4/19/2008
Sheet of 3 of 3
File: C:\Documents and Settings\...IO RevG.SchDoc
Drawn By:

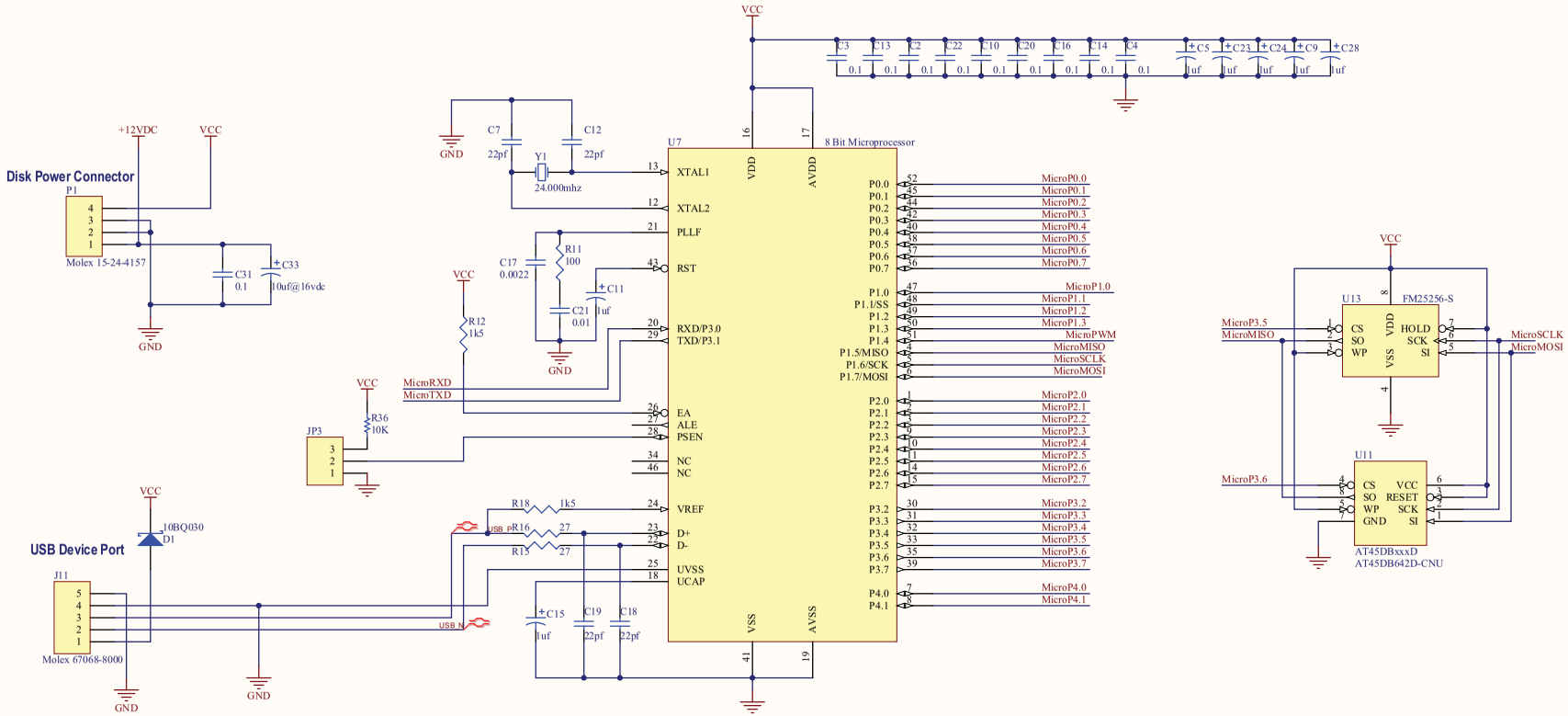

COASTAL AMUSEMENTS INC.

"...manufacturers & distributors of coin-op redemption games..."

Title: Coastal Game I/O		
Size: B	Number	Revision: G
Date: 4/19/2008	Sheet of 1 of 3	
File: C:\Documents and Settings\...\MicroProcessor.SchDoc	Drawn By:	

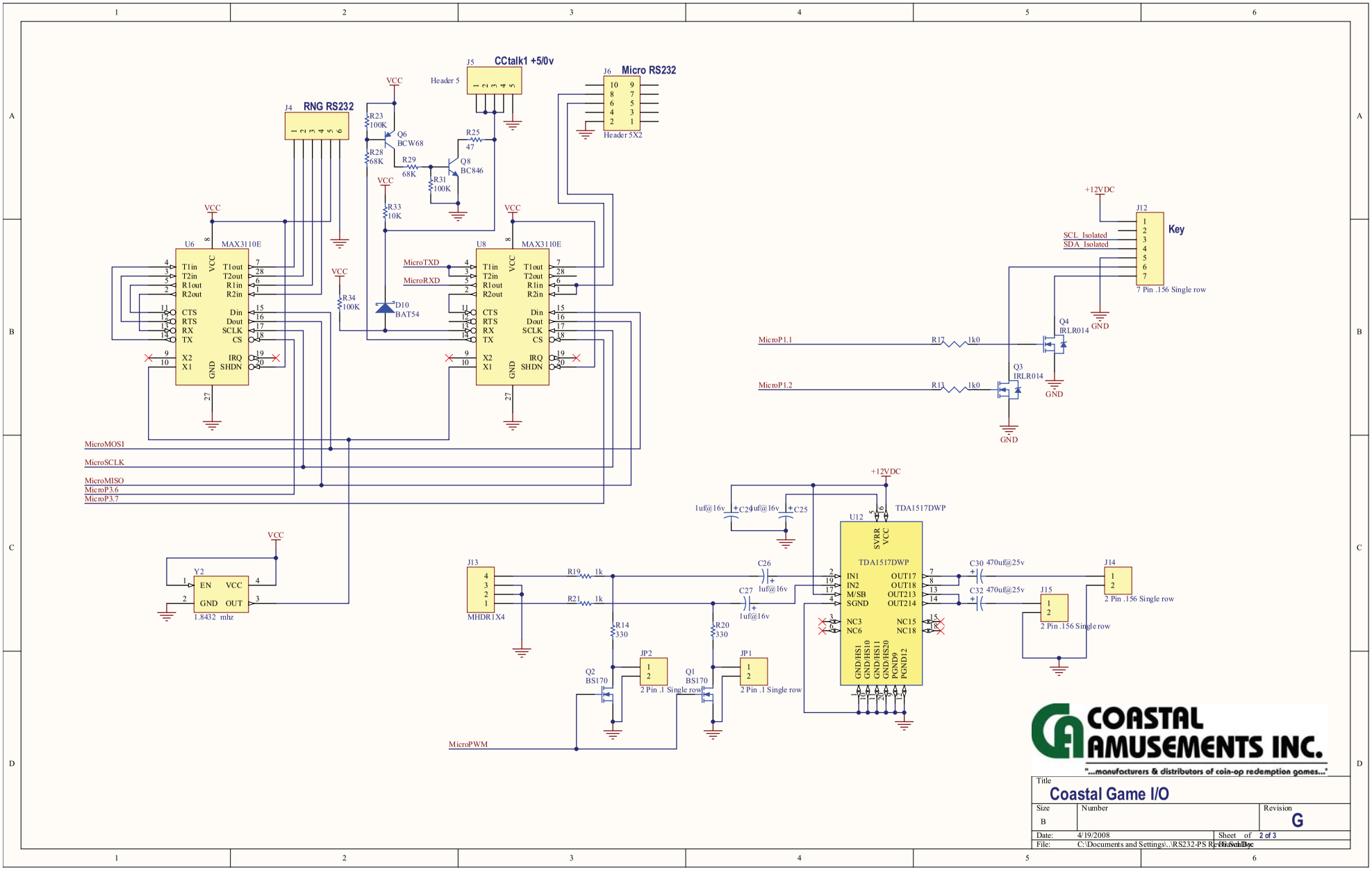
J4 RNG RS232
J5 CCtalk1 +5/0v
Header 5
J6 Micro RS232
Header 5X2
U6 MAX3110E
U8 MAX3110E
T1in T2in R1out R2out CTS RTS RX TX X2 X1 GND
T1out T2out R1in R2in Din Dout SCLK CS IRQ SHDN
VCC
MicroTXD
MicroRXD
MicroMOSI
MicroSCLK
MicroMISO
MicroP3.6
MicroP3.7
R23 100K
R28 68K
R29 68K
R31 100K
R33 10K
R34 100K
R25 47
Q6 BCW68
Q8 BC846
D10 BAT54
Y2 EN VCC GND OUT
1.8432 mhz
+12VDC
J12 Key
SCL_Isolated
SDA_Isolated
7 Pin .156 Single row
Q4 IRLR014
Q3 IRLR014
MicroP1.1
MicroP1.2
R17 1k0
R13 1k0
GND
J13 MHDR1X4
R19 1k
R21 1k
R14 330
R20 330
Q2 BS170
Q1 BS170
JP2 2 Pin .1 Single row
JP1 2 Pin .1 Single row
MicroPWM
C24 1uf@16v
C25 1uf@16v
C26 1uf@16v
C27 1uf@16v
U12 TDA1517DWP
SVRR VCC
IN1 IN2 M/SB SGND
OUT17 OUT18 OUT213 OUT214
NC3 NC6 NC15 NC18
GND/HS1 GND/HS10 GND/HS11 GND/HS20 PGND9 PGND12
C30 470uf@25v
C32 470uf@25v
J14 2 Pin .156 Single row
J15 2 Pin .156 Single row
COASTAL AMUSEMENTS INC.
"...manufacturers & distributors of coin-op redemption games..."
Title
Coastal Game I/O
Size B
Number
Revision G
Date: 4/19/2008
Sheet of 2 of 3
File: C:\Documents and Settings\...\RS232-PS Revision.Sch.Doc

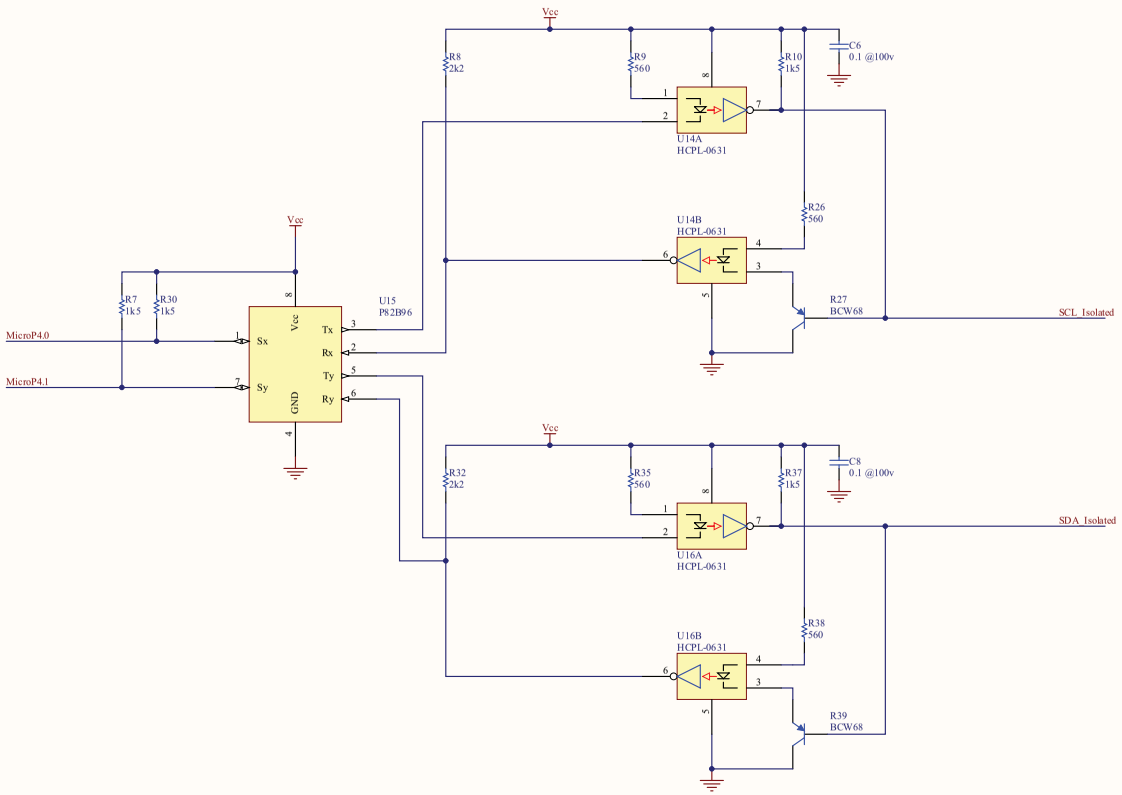

COASTAL AMUSEMENTS INC.
"...manufacturers & distributors of coin-op redemption games..."

Title: TWI Opto Isolation		
Size: Tabloid	Number	Revision: G
Date: 4/19/2008		Sheet of
File: C:\Documents and Settings\...\TwiOptoRev		Drawn By:

1. PCB is 2 Layer, copper 1 oz. minimum.
   Finished Thickness to be .063 inch, +- .008 inch.
2. Use GFR-4 or Equivalent.
3. Conductor Width is to be no less than .008 inch.
4. Conductor Spacing is to be no less than .006 inch.
5. EING Plating after Solder Mask
6. Screen Component Side legend ONLY in WHITE Epoxy.
7. All Hole Sizes are after Plating.
8. Board must be RoHS compatible.

4/19/2008 11:12:27 AM

Rev.G

Mechanical 1

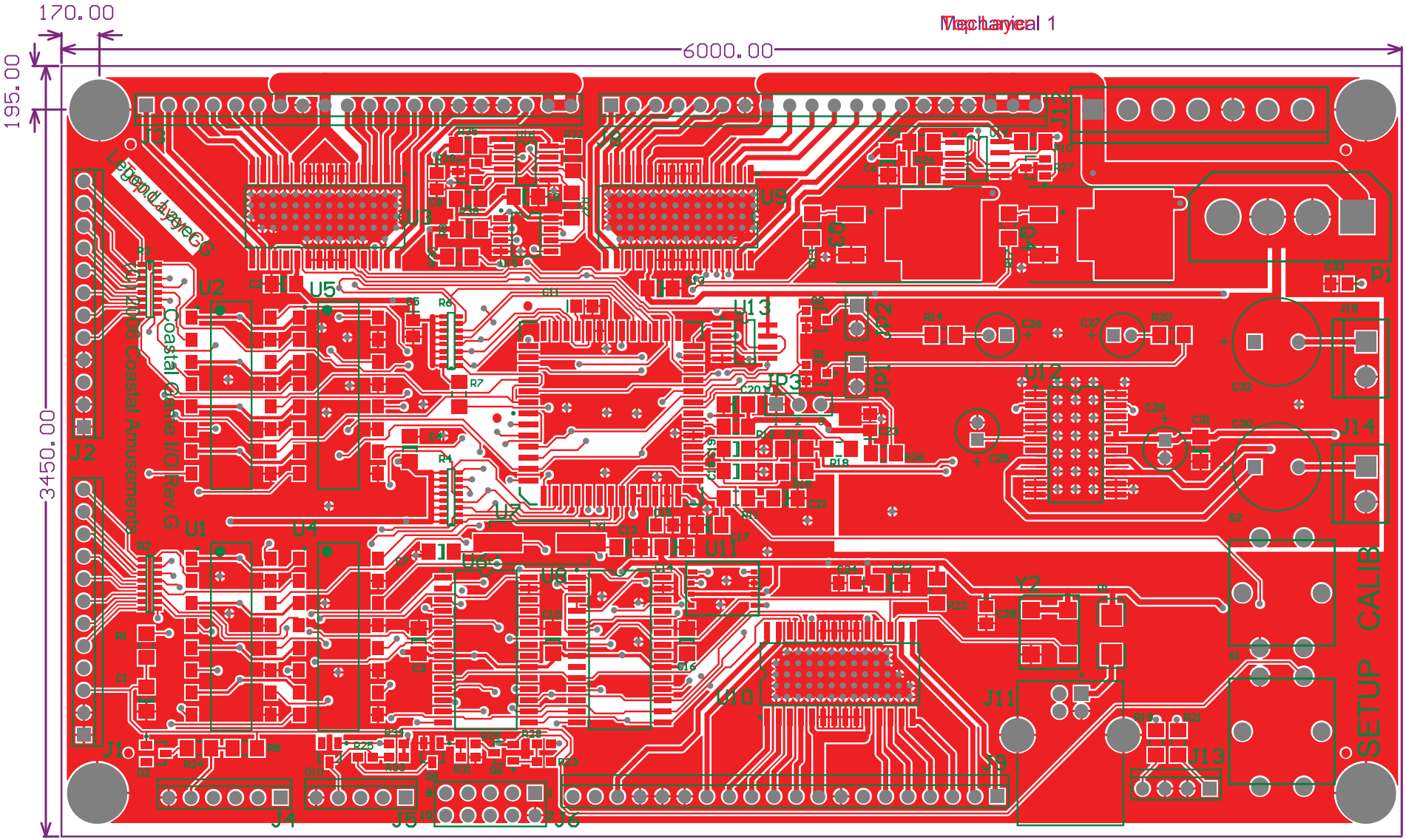

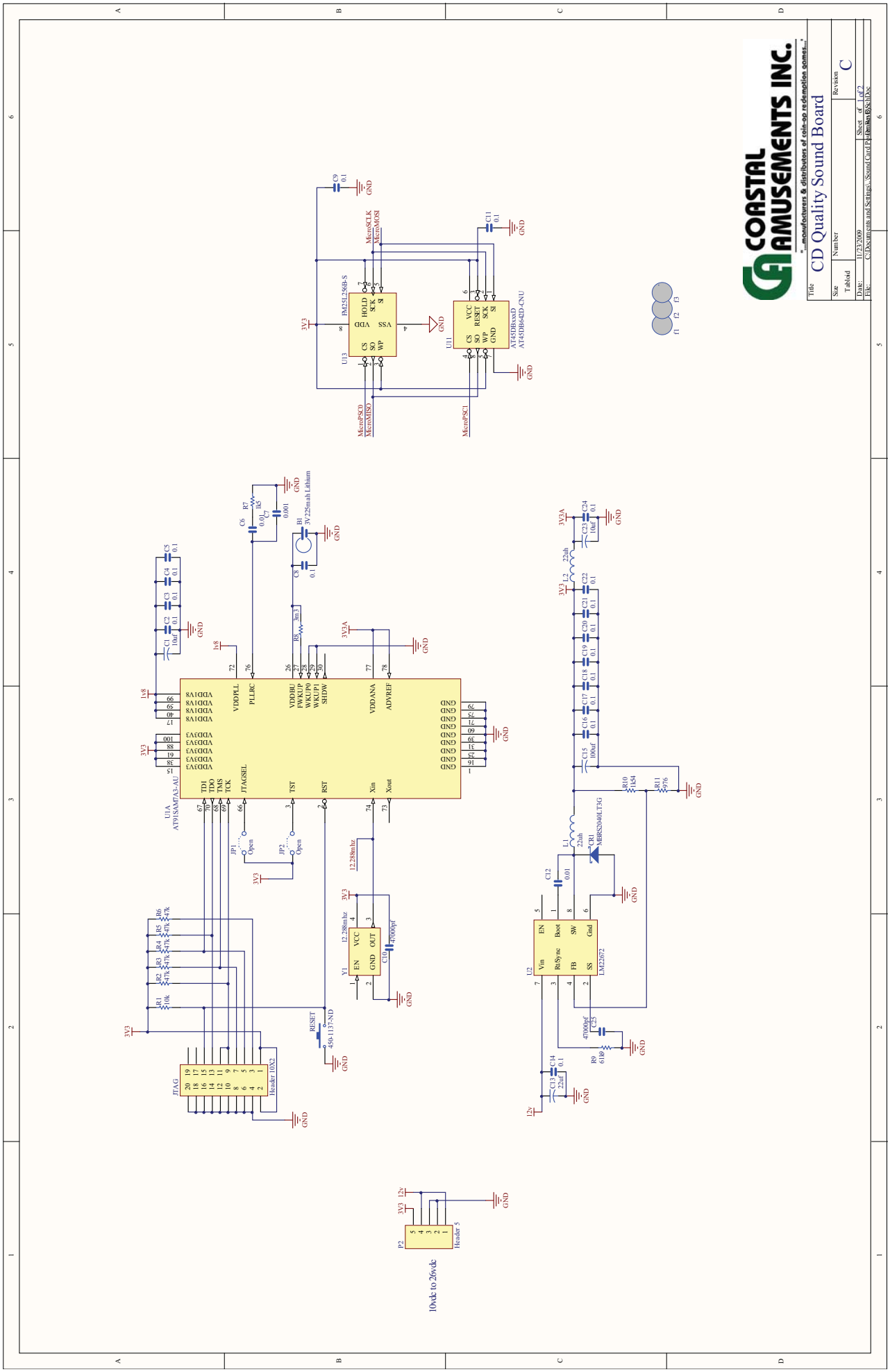
COASTAL AMUSEMENTS INC.
"...manufacturers & distributors of coin-op redemption games..."
Title
CD Quality Sound Board
Size
Tabloid
Number
Revision
C
Date: 11/23/2009
Sheet of 1 of 2
File: C:\Documents and Settings\...\Sound Card Pcb\Sound Bd\SchDoc
U1A
AT91SAM7A3-AU
U11
AT45DB64D-CNU
U13
FM25L256B-S
U2
LM22672
Y1
12.288mhz
JTAG
Header 10X2
P2
Header 5
10vdc to 26vdc
B1
3V225mah Lithium
RESET
450-1137-ND
MicroSCLK
MicroMOSI
MicroPSC0
MicroMISO
MicroPSC1
GND
3V3
3V3A
12v

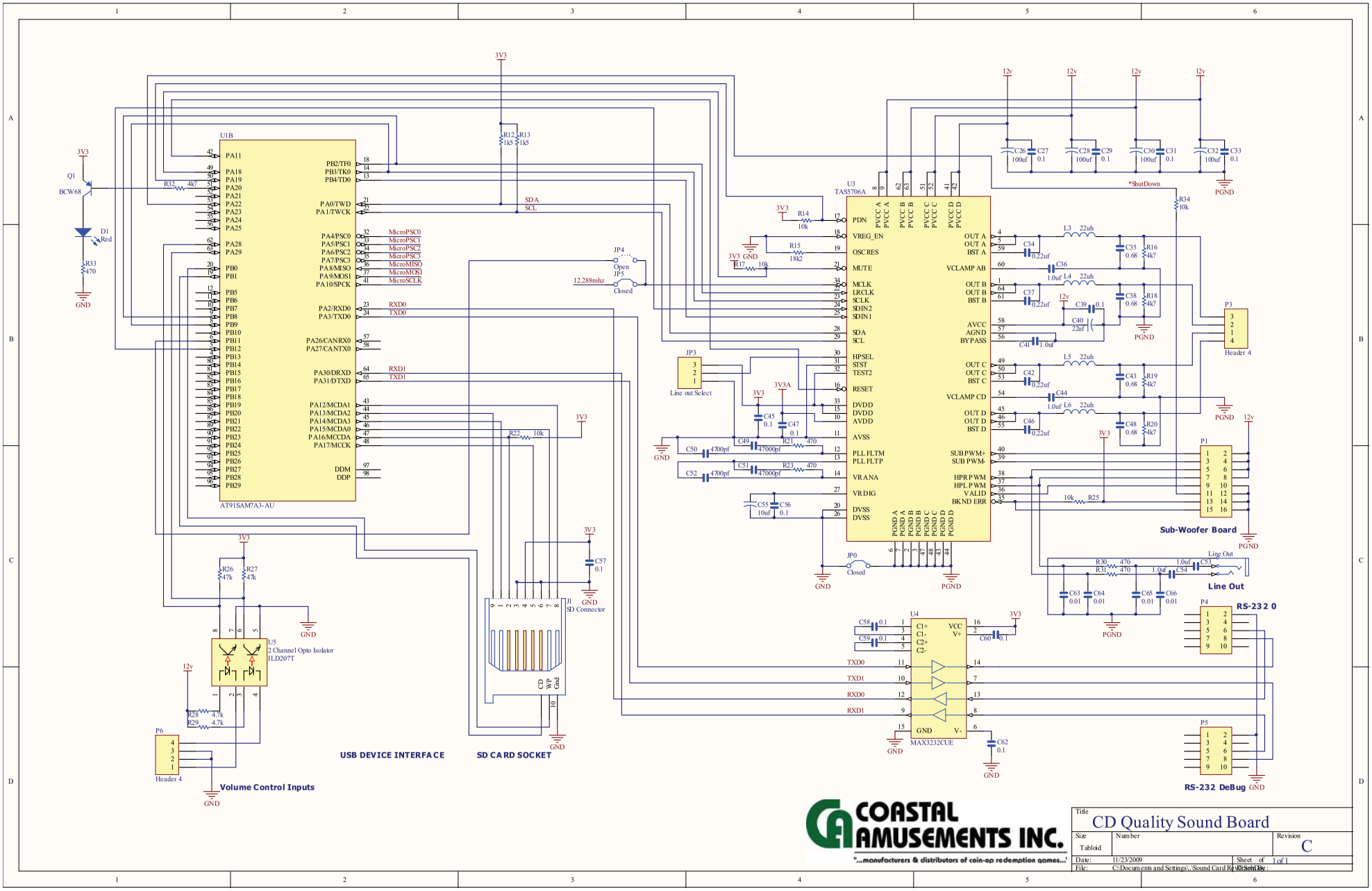
U1B
AT91SAM7A3-AU
U3
TAS5706A
U4
MAX3232CUE
U5
2 Channel Opto Isolator
ILD207T
Q1
BCW68
D1
Red
P6
Header 4
Volume Control Inputs
USB DEVICE INTERFACE
SD CARD SOCKET
J1
SD Connector
JP3
Line out Select
JP4
Open
JP5
Closed
JP0
Closed
12.288mhz
P1
Sub-Woofer Board
P3
Header 4
P4
RS-232 0
P5
RS-232 DeBug
Line Out
*ShutDown
COASTAL AMUSEMENTS INC.
"...manufacturers & distributors of coin-op redemption games..."
Title
CD Quality Sound Board
Size
Tabloid
Number
Revision
C
Date: 11/23/2009
Sheet of 1 of 1
File: C:\Documents and Settings\...\Sound Card Rev C.SchDoc
Drawn By:

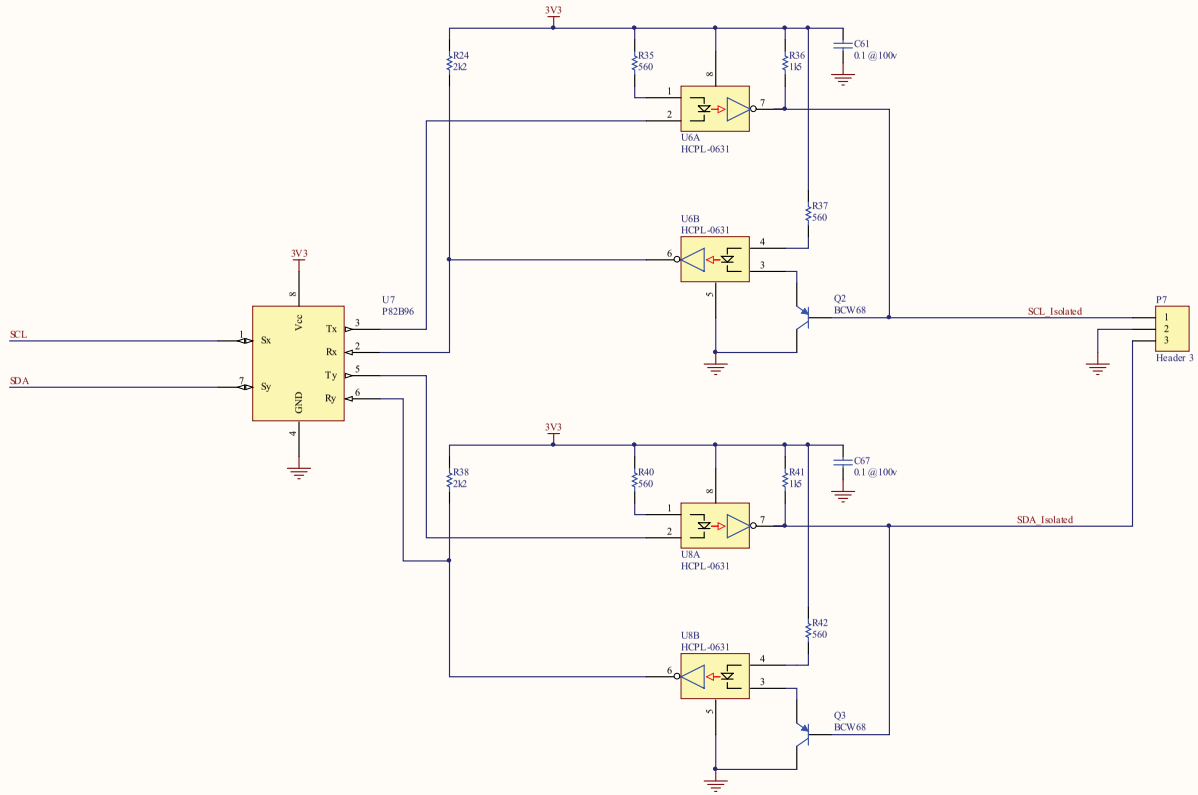

COASTAL AMUSEMENTS INC.

"...manufacturers & distributors of coin-op redemption games..."

Title: Sound Board TWI Opto Isolation		
Size: Tabloid	Number	Revision: C
Date: 11/23/2009		Sheet of
File: C:\Documents and Settings\...\Sound Card TWI Opto Rev C.SchDoc		Drawn By:

1. PCB is 2 Layer, copper 1 oz. minimum.
   Finished Thickness to be .063 inch, +- .008 inch.
2. Use GFR-4 or Equivalent.
3. Conductor Width is to be no less than .006 inch.
4. Conductor Spacing is to be no less than .006 inch.
5. There is to be Solder Mask before ENIG

Rev.C

6. Screen Component Side legend ONLY in WHITE Epoxy.
7. All Hole Sizes are after Plating.
8. Board must be RoHS compatible.

9:15:30 PM 11/23/2009
Sound Card RevC.PcbDoc

Top Overlay
Bottom Overlay
Top Layer
Bottom Layer

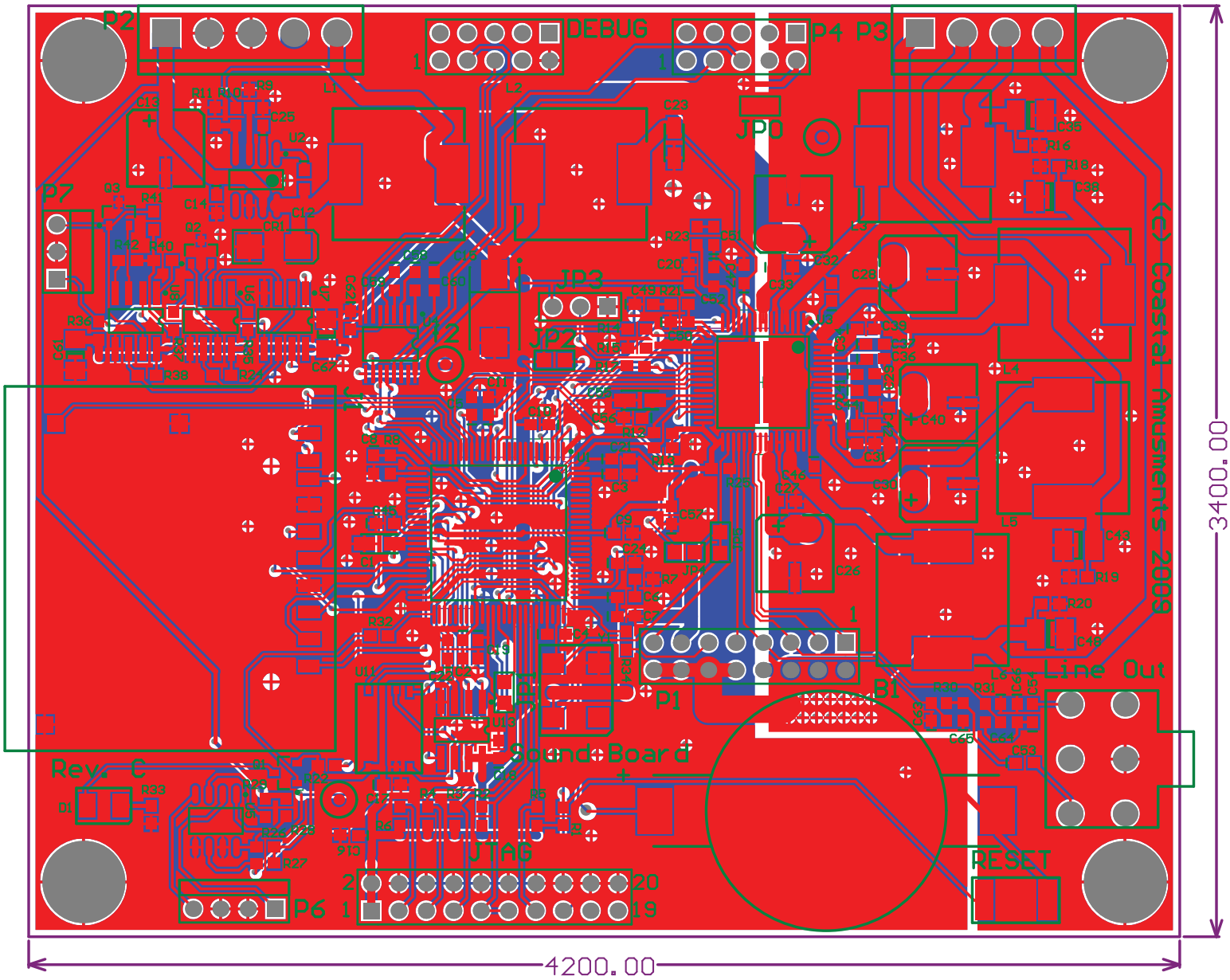

1. PCB is 2 Layer, copper 1 oz. minimum.
   Finished Thickness to be .063 inch, +- .008 inch.
2. Use GFR-4 or Equivalent.
3. Conductor Width is to be no less than .008 inch.
4. Conductor Spacing is to be no less than .008 inch.
5. This is to be Solder Mask before ENIG

Rev.C

6. Screen Bottom legend in WHITE Epoxy.
7. All Hole Sizes are after Plating.
8. Board must be RoHS compatible.

8:36:34 PM 11/3/2008

Operation Playfield 7 segment

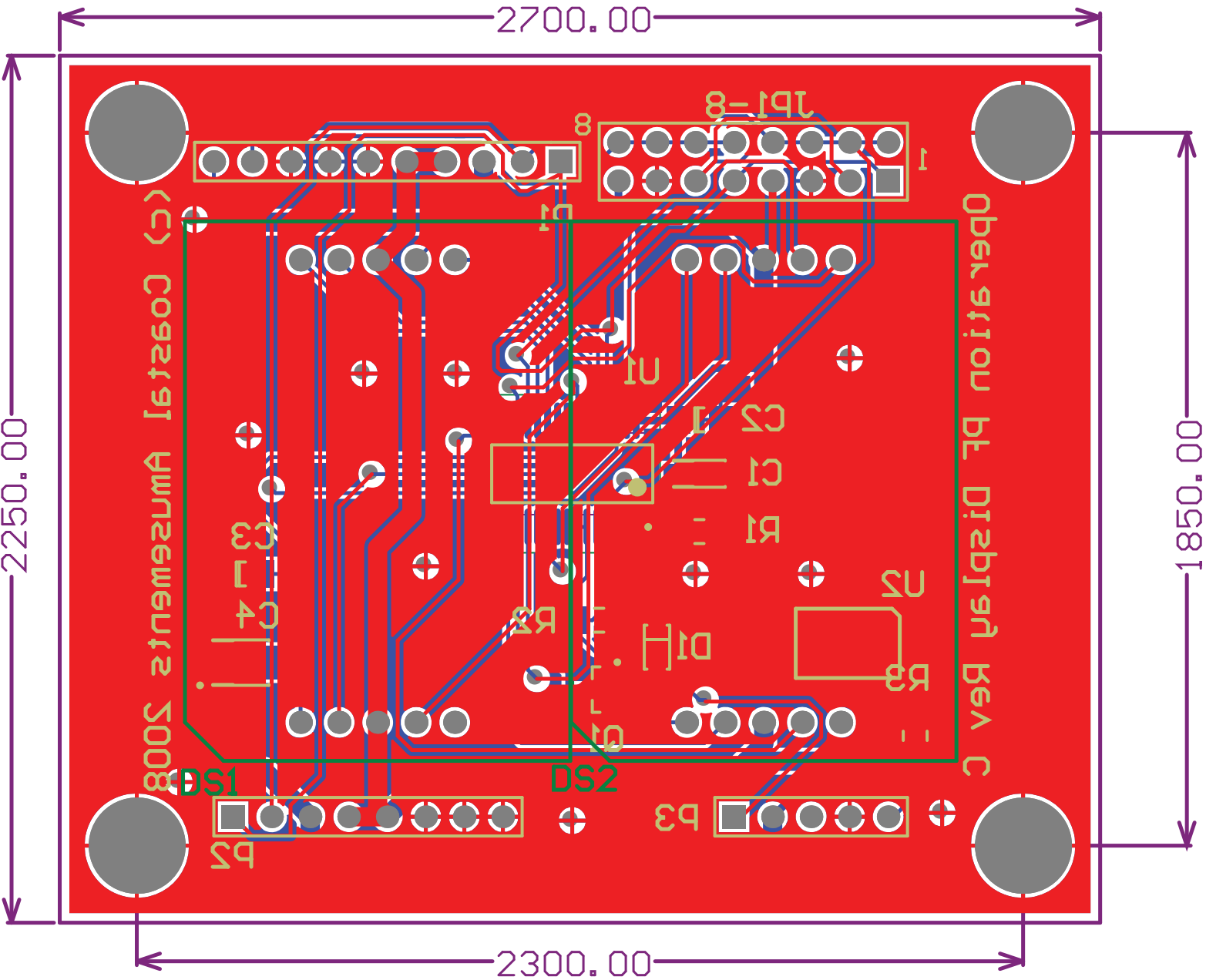

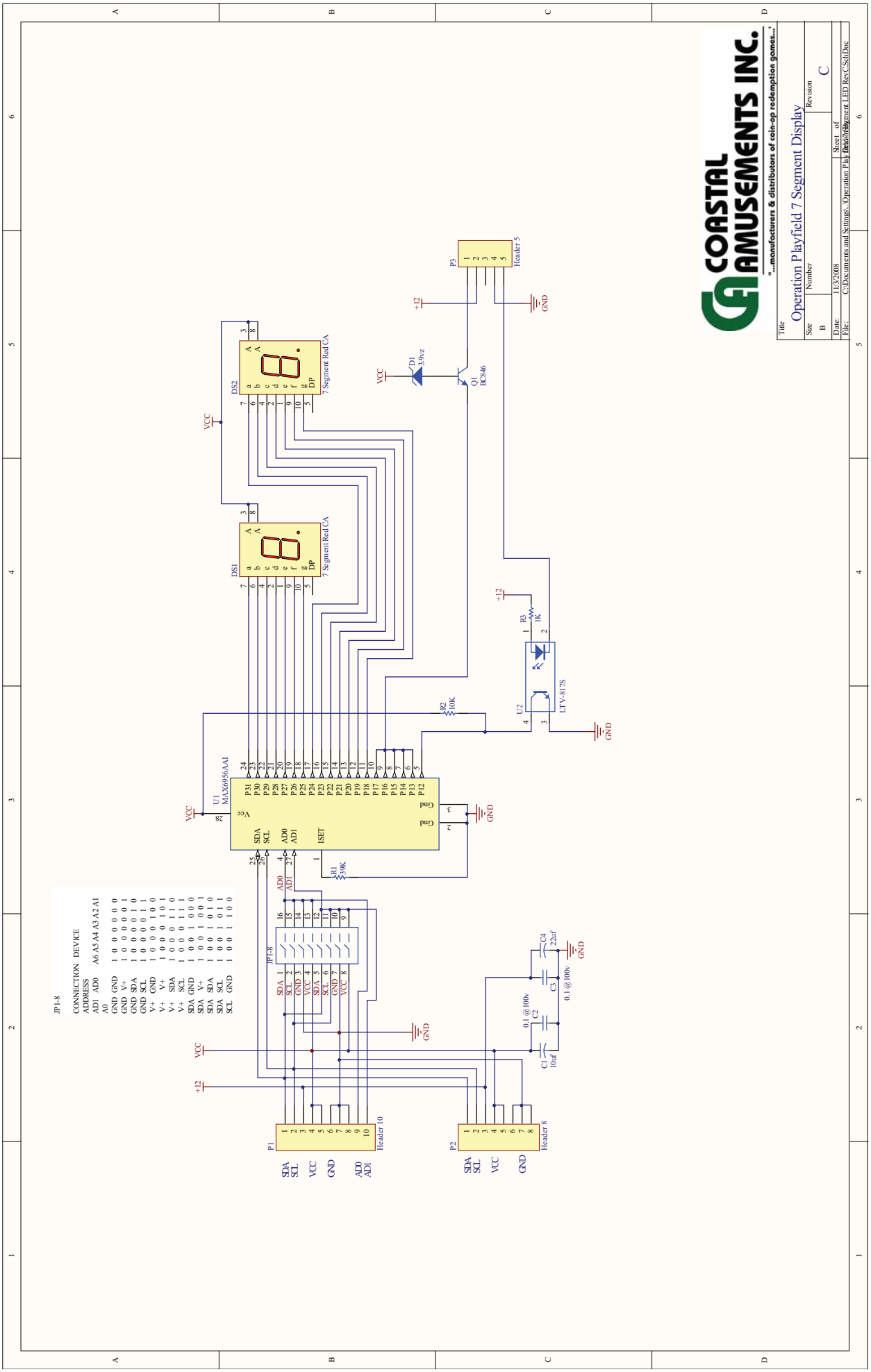
COASTAL AMUSEMENTS INC.
"...manufacturers & distributors of coin-op redemption games..."
Title
Operation Playfield 7 Segment Display
Size
B
Number
Revision
C
Date: 11/3/2008
Sheet of
File: C:\Documents and Settings\...\Operation Play Field 7 Segment LED RevC.SchDoc
JP1-8
CONNECTION DEVICE
ADDRESS
AD1 AD0 A6 A5 A4 A3 A2 A1
A0
GND GND 1 0 0 0 0 0 0
GND V+ 1 0 0 0 0 0 1
GND SDA 1 0 0 0 0 1 0
GND SCL 1 0 0 0 0 1 1
V+ GND 1 0 0 0 1 0 0
V+ V+ 1 0 0 0 1 0 1
V+ SDA 1 0 0 0 1 1 0
V+ SCL 1 0 0 0 1 1 1
SDA GND 1 0 0 1 0 0 0
SDA V+ 1 0 0 1 0 0 1
SDA SDA 1 0 0 1 0 1 0
SDA SCL 1 0 0 1 0 1 1
SCL GND 1 0 0 1 1 0 0
P1
Header 10
SDA
SCL
VCC
GND
AD0
AD1
P2
Header 8
SDA
SCL
VCC
GND
U1
MAX6956AAI
Vcc
SDA
SCL
AD0
AD1
ISET
Gnd
R1
39K
R2
10K
R3
1K
U2
LTV-817S
DS1
7 Segment Red CA
DS2
7 Segment Red CA
D1
3.9vz
Q1
BC846
P3
Header 5
+12
GND
VCC
C1
10uf
C2
0.1 @100v
C3
0.1 @100v
C4
22uf

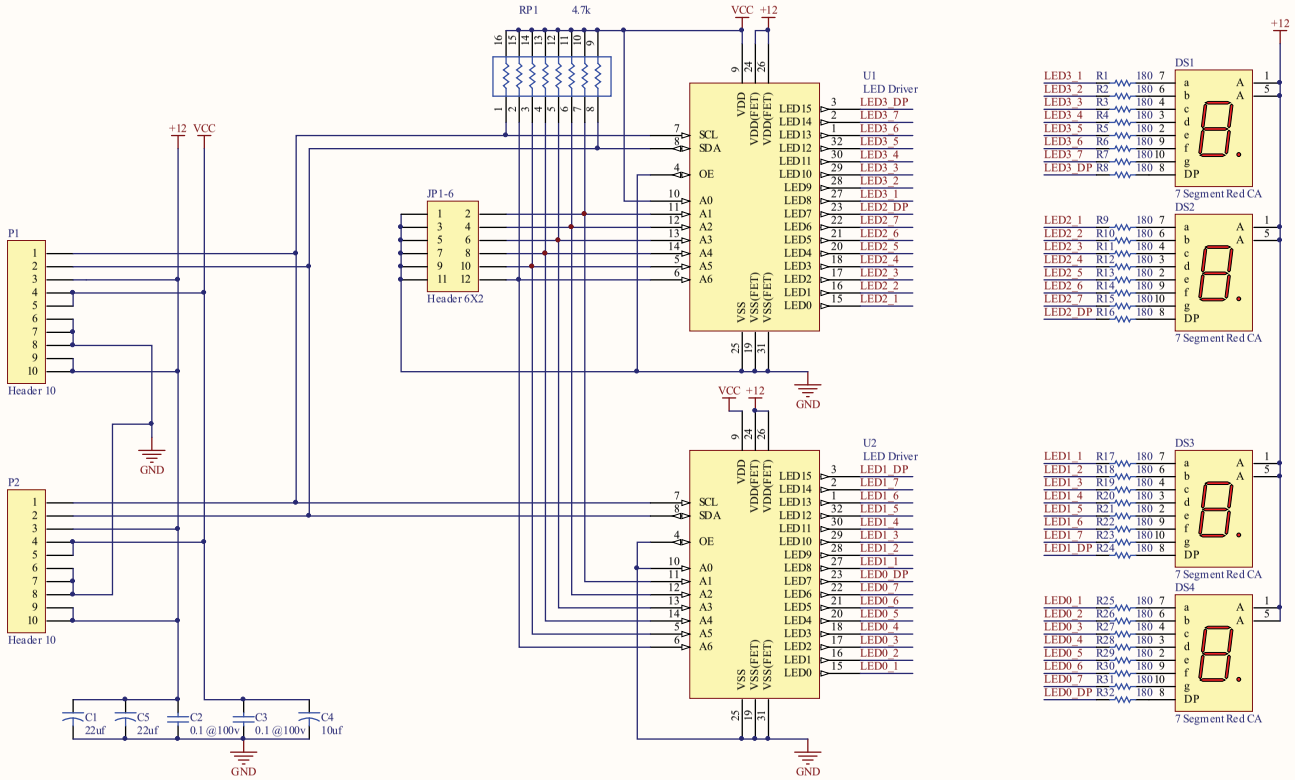

COASTAL AMUSEMENTS INC.

"...manufacturers & distributors of coin-op redemption games..."

Title	Operation 7 Segment Score Driver PCB	
Size B	Number	Revision A2
Date: 5/23/2009	Sheet of	
File: C:\Documents and Settings\...\Operation 7 Segment Score Driver RevB.SchDoc	Drawn By:	

1. PCB is 2 Layer, copper 1 oz. minimum.
   Finished Thickness to be .063 inch, +- .008 inch.
2. Use GFR-4 or Equivalent.
3. Conductor Width is to be no less than .010 inch.
4. Conductor Spacing is to be no less than .008 inch.
5. There is to be Solder Mask before ENIG
6. Screen Bottom Side legend ONLY in WHITE Epoxy.
7. All Hole Sizes are after Plating.
8. Board must be RoHS compatible.

7.0.0.13815

7:22:26 PM 5/23/2009

Operation 7 Segment Score Driver RevB.PcbDoc

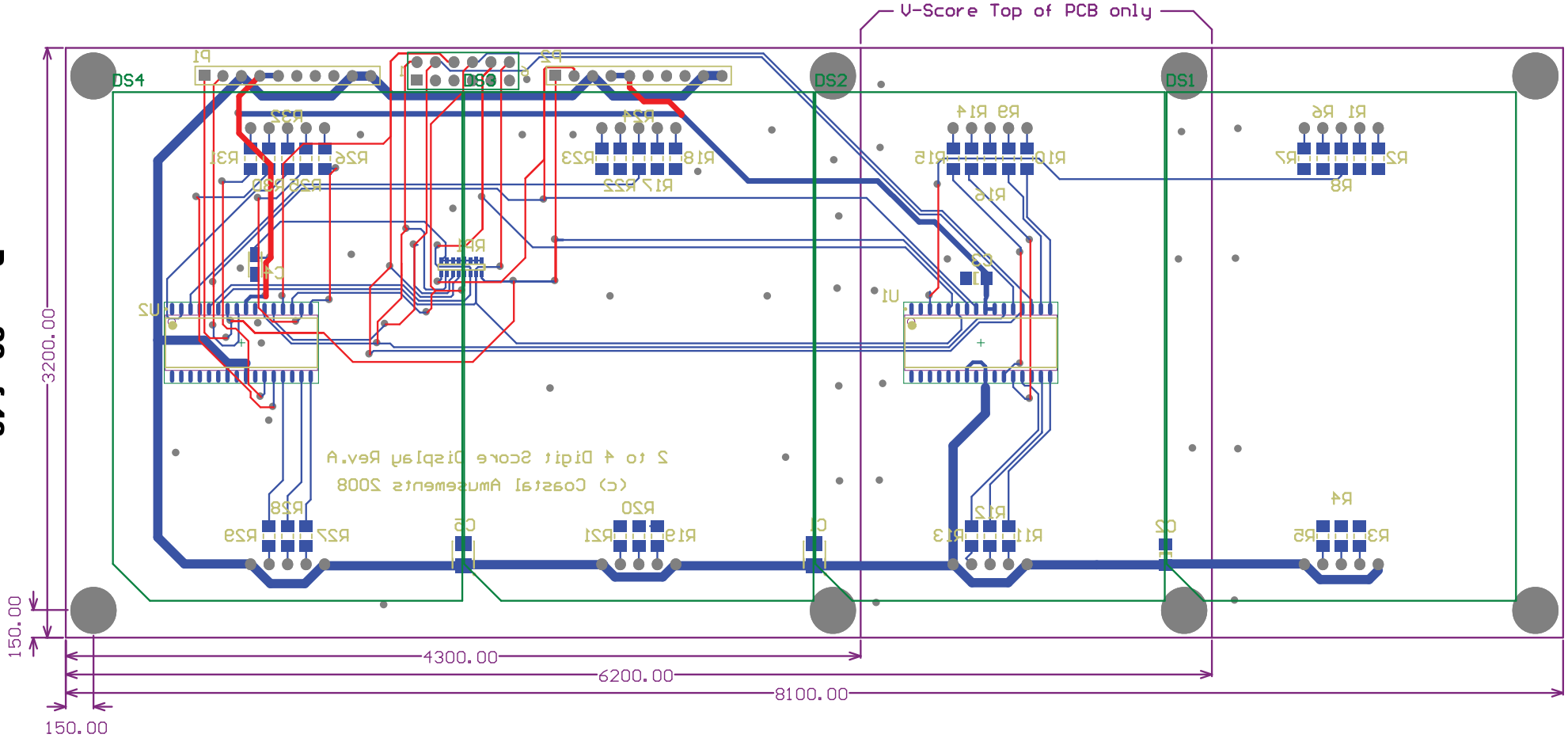

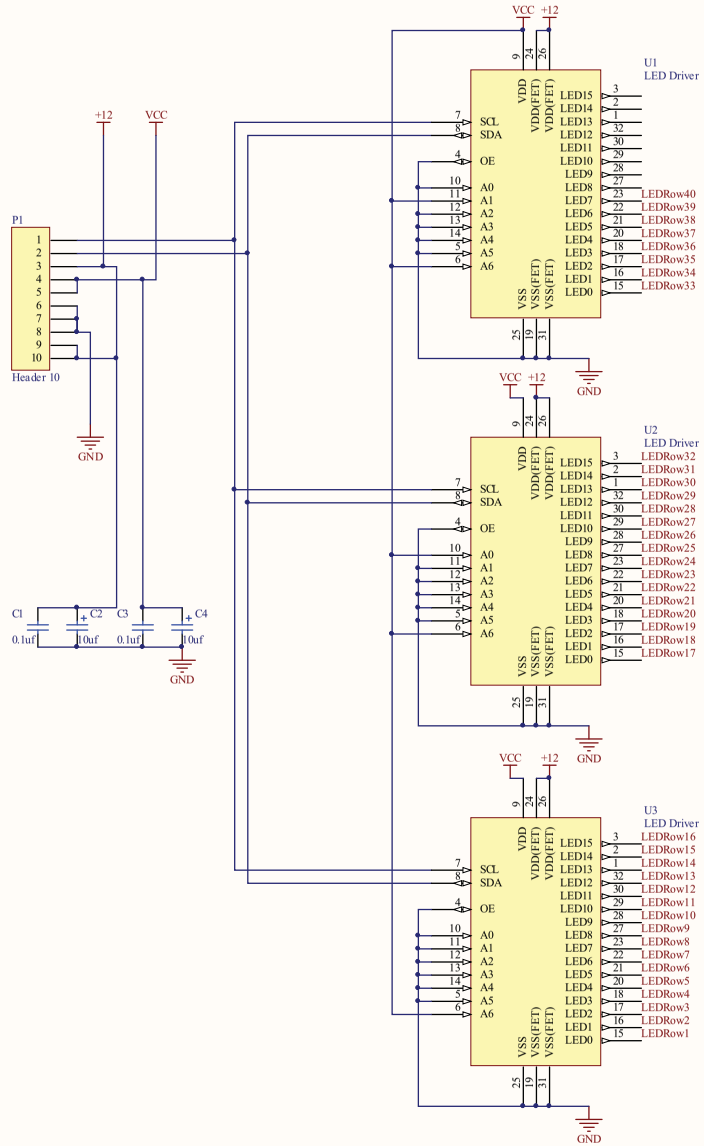

COASTAL AMUSEMENTS INC.

"...manufacturers & distributors of coin-op redemption games..."

Title: Operation Column Driver PCB		
Size: B	Number	Revision: A
Date: 8/23/2008		Sheet of
File: C:\Documents and Settings\...\Operation Column Driver Rev A.SchDoc		Drawn By:

1. PCB is 2 Layer, copper 1 oz. minimum.
   Finished Thickness to be .063 inch, +- .008 inch.
2. Use GFR-4 or Equivalent.
3. Conductor Width is to be no less than .010 inch.
4. Conductor Spacing is to be no less than .008 inch.
5. There is to be Solder Mask before ENIG

Rev.A

6. Screen Component Side legend ONLY in WHITE Epoxy.
7. All Hole Sizes are after Plating.
8. Board must be RoHS compatible.

6:52:25 PM 8/23/2008
Operation Column Driver Rev A.PcbDoc

Top Layer
Bottom Layer
Top Overlay
Bottom Overlay

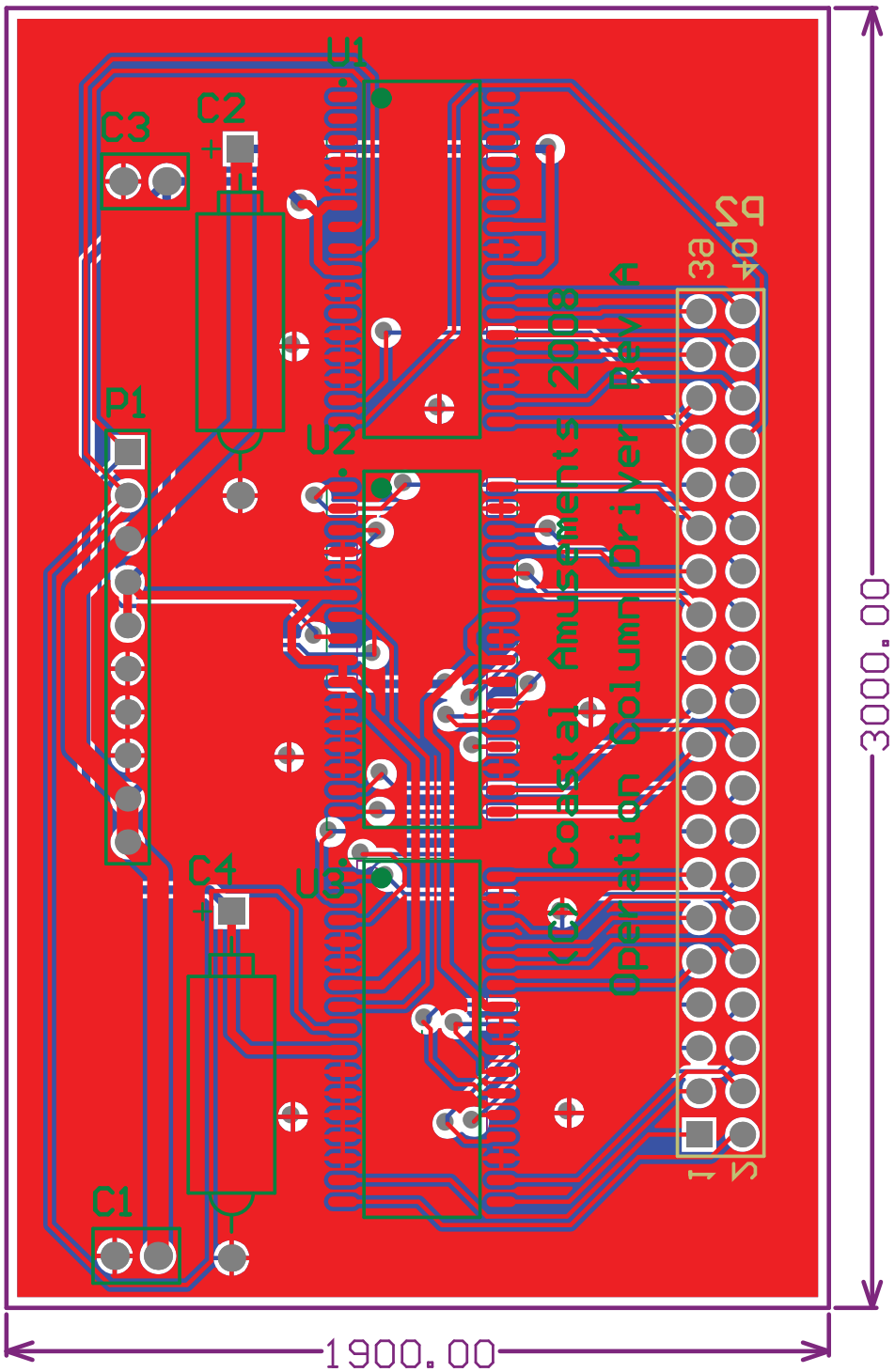

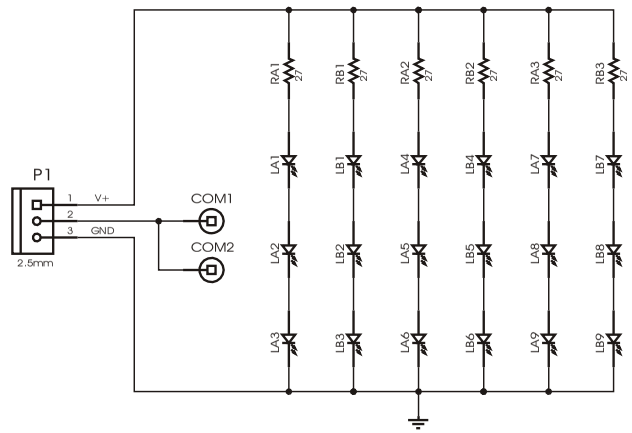

SIZE	REV	FILE NAME.	EDITER.
A4	0	W080103A	林 麗 美
	DATE	2008.02.18	SHEET 1 OF 1

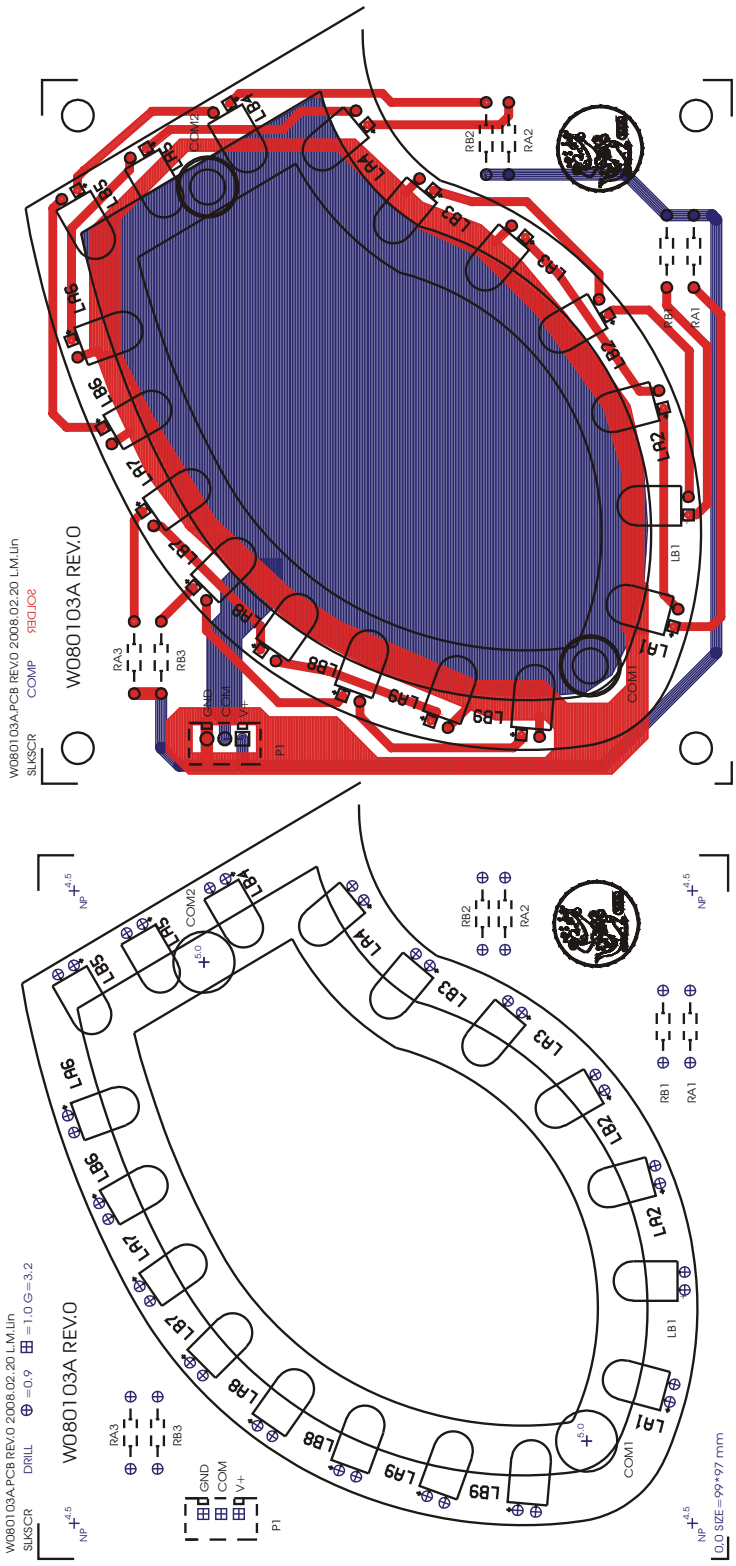
W080103A-PCB REV.0 2008.02.20 L.M.Un
SLKSCR COMP SOLDER
W080103A REV.0
W080103A-PCB REV.0 2008.02.20 L.M.Un
SLKSCR DRILL ⊕ =0.9 ⊞ =1.0 G=3.2
W080103A REV.0
0.0 SIZE=99*97 mm
LR1
LR2
LR3
LR4
LR5
LR6
LR7
LR8
LR9
LB1
LB2
LB3
LB4
LB5
LB6
LB7
LB8
LB9
COM1
COM2
RA1
RA2
RA3
RB1
RB2
RB3
P1
GND
COM
V+
NP

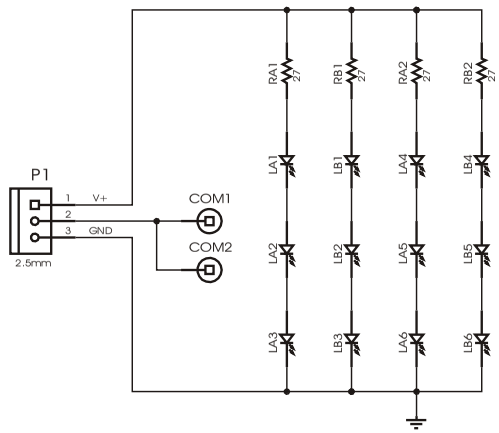

SIZE	REV	FILE NAME.	EDITER.
A4	0	W080103B	林 麗 美
	DATE	2008.02.18	SHEET 1 OF 1

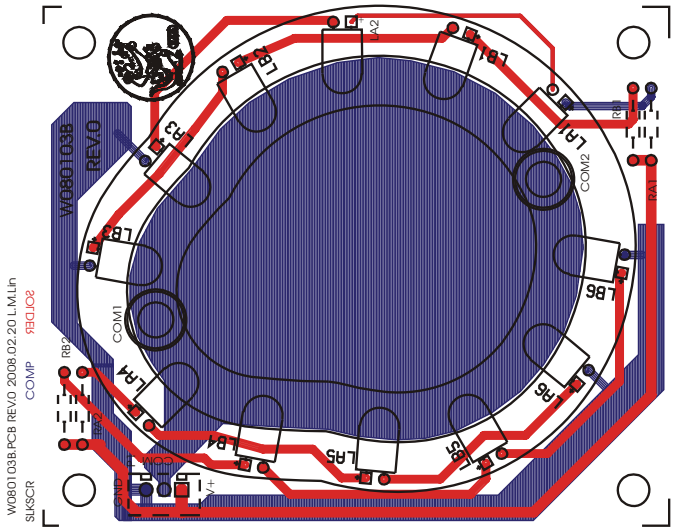
W080103B.PCB REV.0 2008.02.20 L.M.Lin
SLKSCR
COMP
SOLDER
W080103B
REV.0
LA2
LB1
LB2
LA3
LB3
LA1
COM2
RB1
RA1
COM1
LB6
LA4
LA6
LB4
LA5
LB5
RB2
RA2
GND
V+

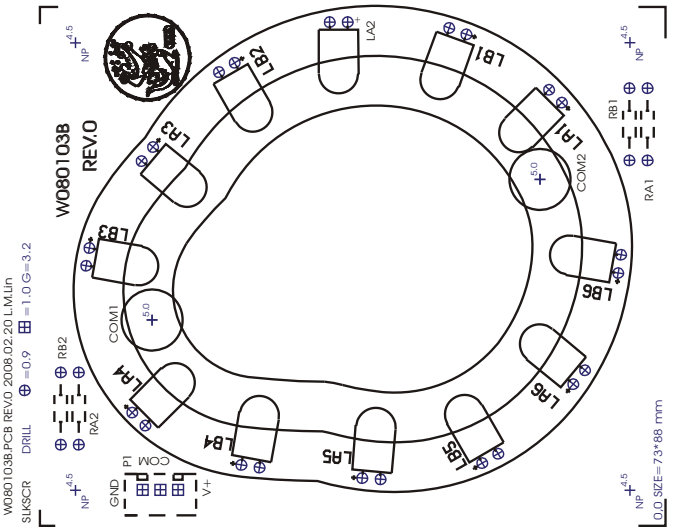
W080103B.PCB REV.0 2008.02.20 L.M.Lin
SLKSCR
DRILL
=0.9
=1.0 G=3.2
W080103B
REV.0
LA2
LB1
LB2
LA3
LA1
COM2
RB1
RA1
LB3
COM1
LB6
LA4
LA6
LB4
LA5
LB5
RB2
RA2
GND
P1
COM
V+
0.0 SIZE=73*88 mm

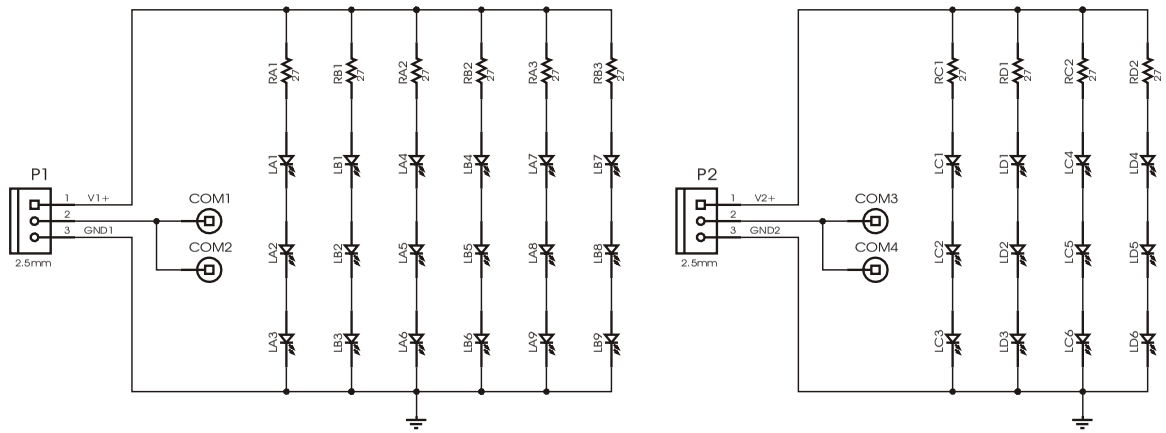

SIZE	REV	FILE NAME.	EDITER.
A4	0	W080103C	林 麗 美
	DATE	2008.02.21	SHEET 1 OF 1

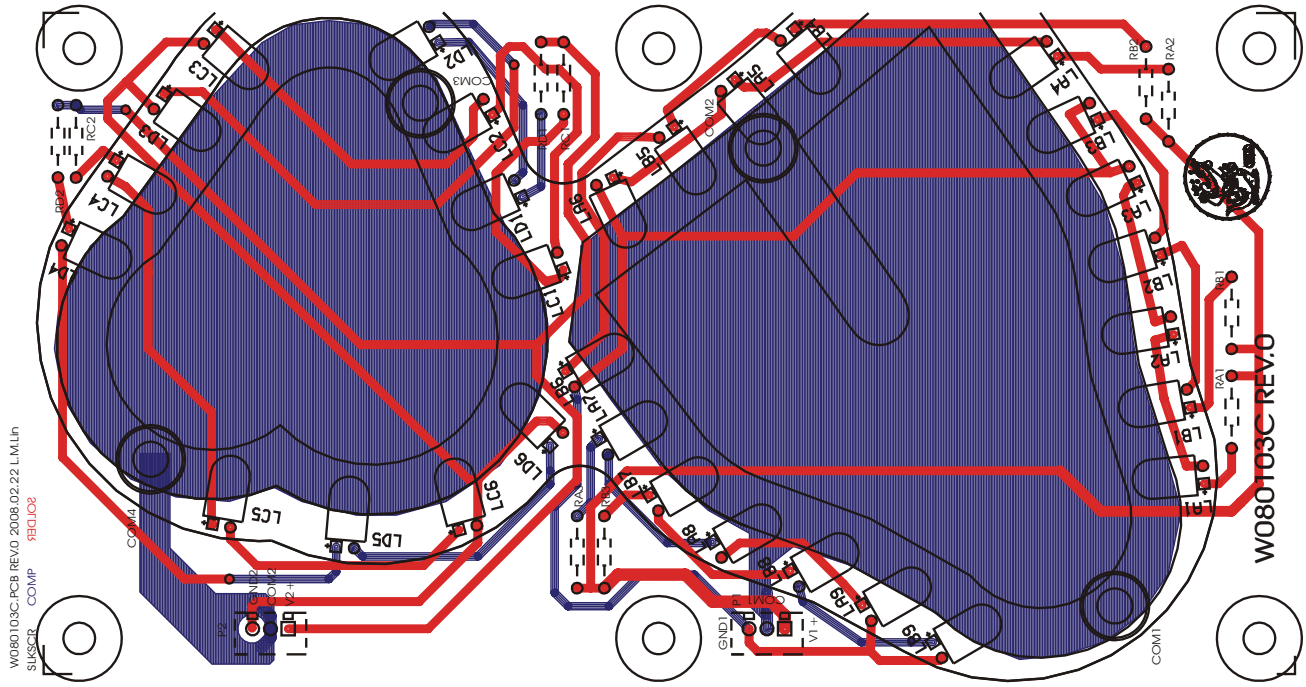
W080103C.PCB REV.0 2008.02.22 L.M.Lin
SLKSCR COMP SOLDER
W080103C REV.0

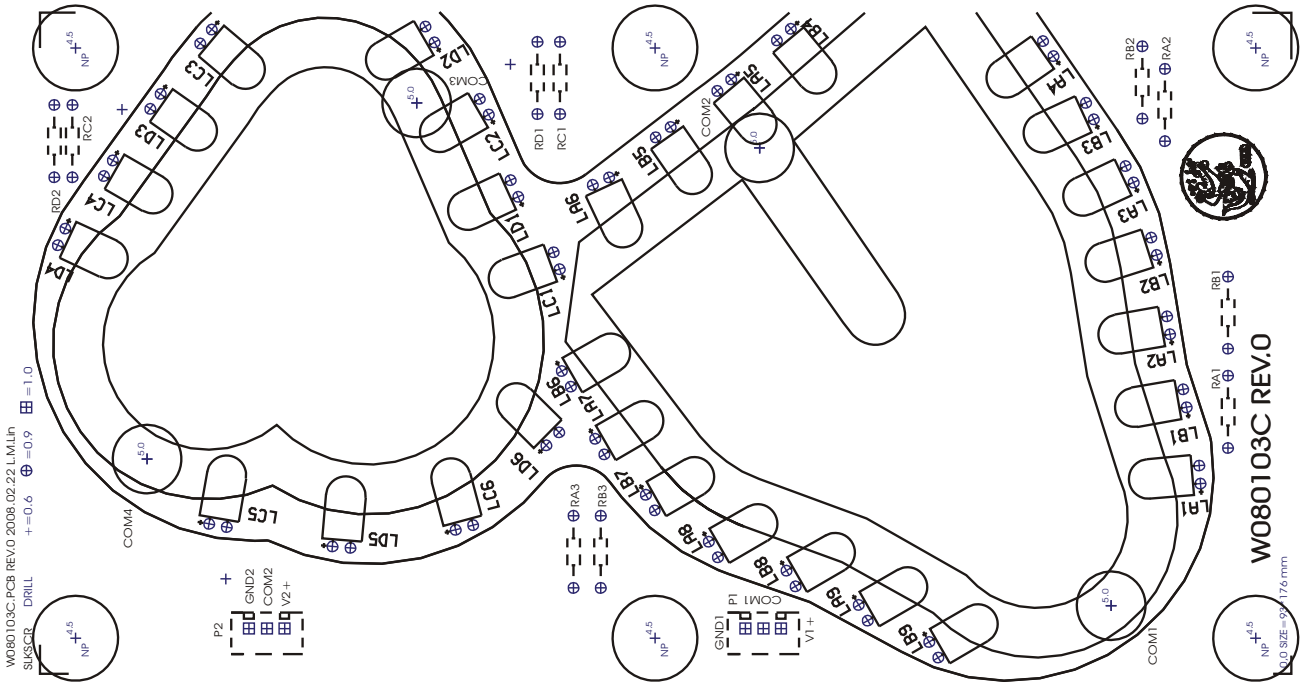
W080103C.PCB REV.0 2008.02.22 L.M.Lin
SLKSCR DRILL
W080103C REV.0

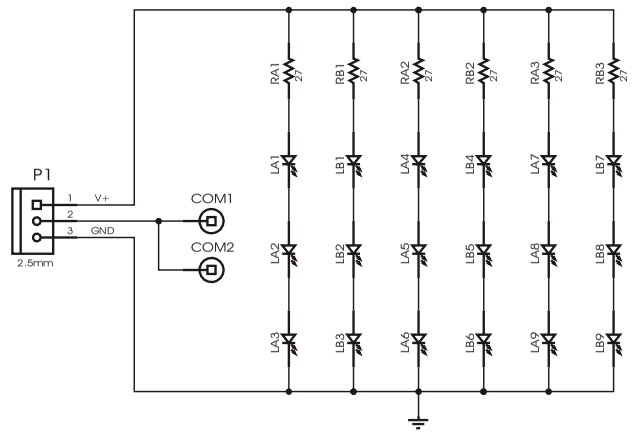

SIZE	REV	FILE NAME.	EDITER.
A4	0	W080103D	林 麗 美
	DATE	2008.02.20	SHEET 1 OF 1

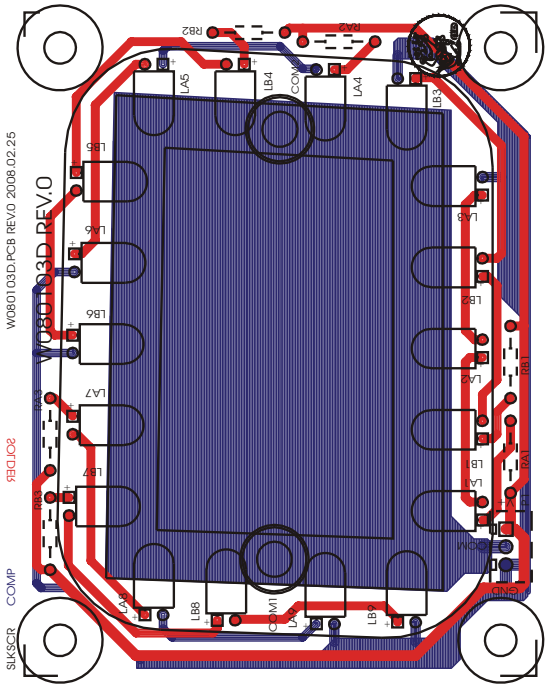
W080103D.PCB REV.0 2008.02.25
W080103D REV.0
SOLDER
COMP
SLKSCR
RB2
RA2
LA5
LB4
COM2
LA4
LB3
LB5
LA6
LB6
LA7
LB7
RA3
RB3
LA3
LB2
LA2
LB1
LA1
RB1
RA1
COM
GND
LA8
LB8
COM1
LA9
LB9

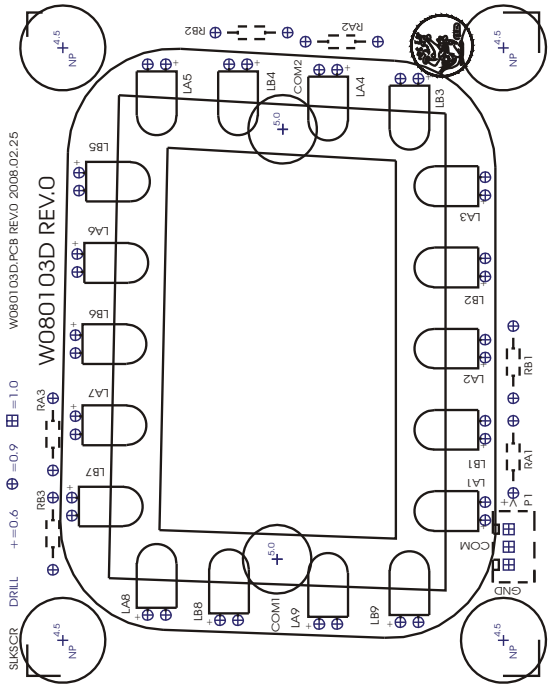
W080103D.PCB REV.0 2008.02.25
W080103D REV.0
DRILL
+ = 0.6
= 0.9
= 1.0
SLKSCR
NP
RB2
RA2
LA5
LB4
COM2
LA4
LB3
LB5
LA6
LB6
LA7
LB7
RA3
RB3
LA3
LB2
LA2
LB1
LA1
RB1
RA1
P1
COM
GND
LA8
LB8
COM1
LA9
LB9

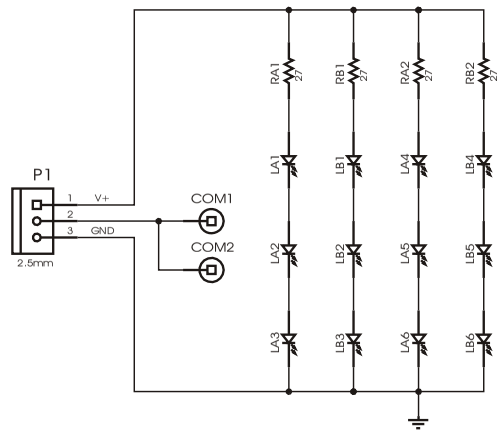

SIZE	REV	FILE NAME.	EDITER.
A4	0	W080103E	林 麗 美
	DATE	2008.02.21	SHEET 1 OF 1

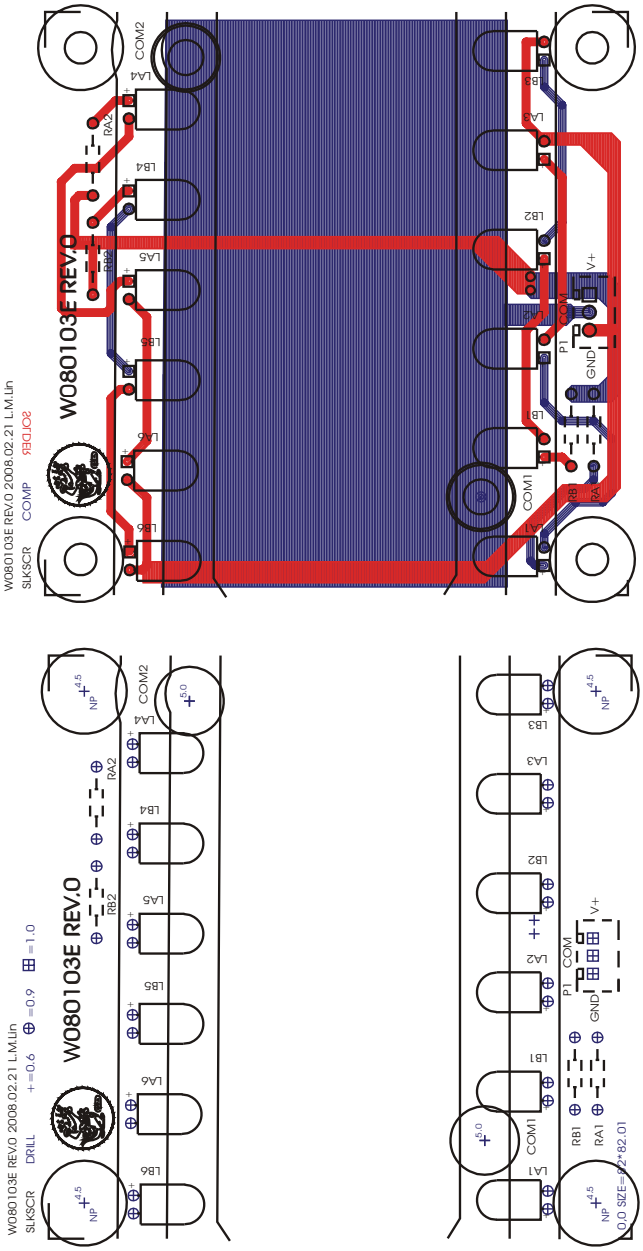
W080103E REV.0 2008.02.21 L.M.Lin
SLKSCR COMP
W080103E REV.0
COM2
COM1
LA1
LA2
LA3
LA4
LA5
LA6
LB1
LB2
LB3
LB4
LB5
LB6
RA1
RA2
RB1
RB2
P1
COM
GND
V+
W080103E REV.0 2008.02.21 L.M.Lin
SLKSCR DRILL
+=0.6 =0.9 =1.0
W080103E REV.0
0.0 SIZE=82*82.01

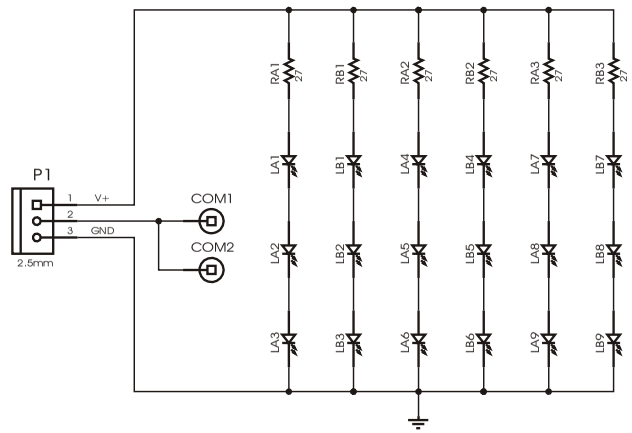

SIZE	REV	FILE NAME.	EDITER.
A4	0	W080103F	林 麗 美
	DATE	2008.02.21	SHEET 1 OF 1

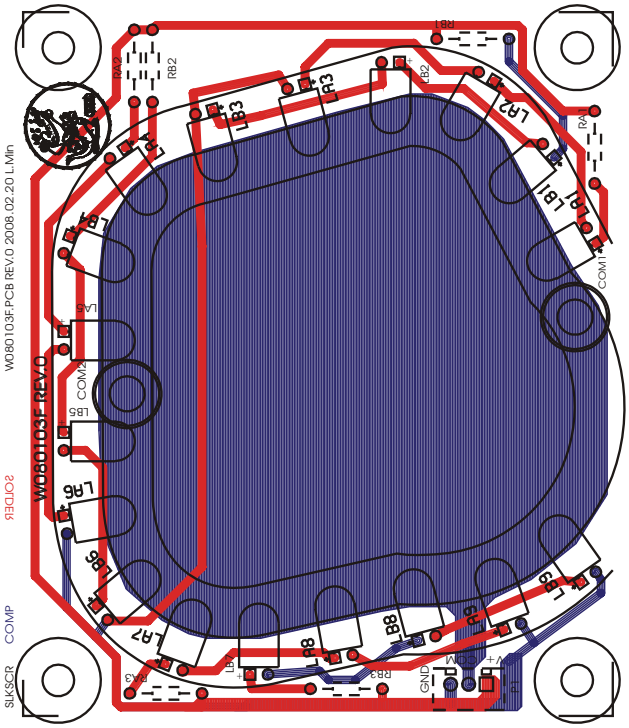
W080103F.PCB REV.0 2008.02.20 L.Min
W080103F REV.0
SOLDER
SLKSCR
COMP
LA1
LA2
LA3
LA4
LA5
LA6
LA7
LA8
LA9
LB1
LB2
LB3
LB4
LB5
LB6
LB7
LB8
LB9
RA1
RA2
RA3
RB1
RB2
RB3
COM1
COM2
GND
V+
COM
P1

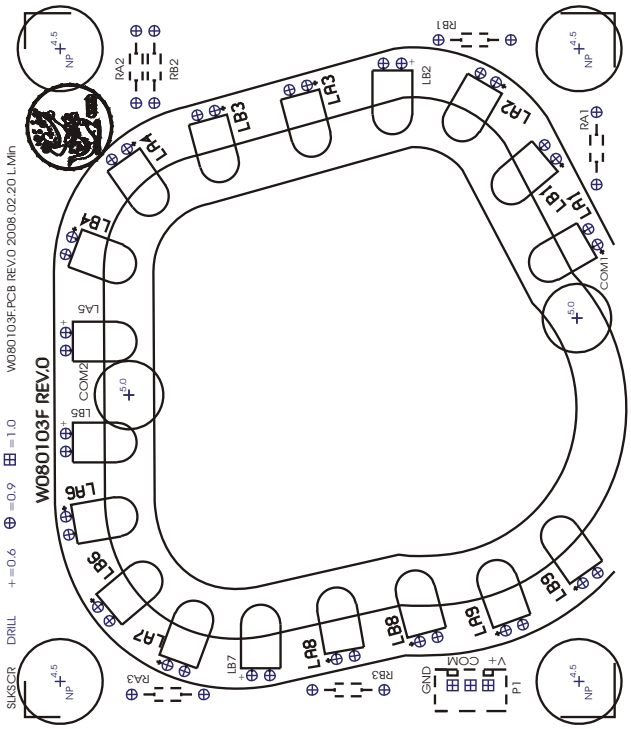
W080103F.PCB REV.0 2008.02.20 L.Min
W080103F REV.0
SLKSCR
DRILL
+=0.6
=0.9
=1.0
LA1
LA2
LA3
LA4
LA5
LA6
LA7
LA8
LA9
LB1
LB2
LB3
LB4
LB5
LB6
LB7
LB8
LB9
RA1
RA2
RA3
RB1
RB2
RB3
COM1
COM2
GND
V+
COM
P1
NP

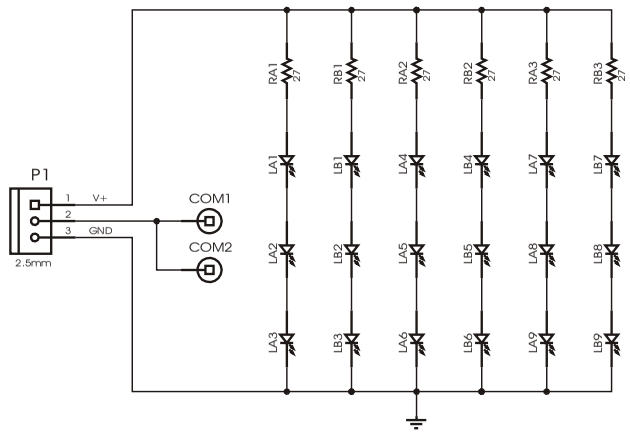

SIZE	REV	FILE NAME.	EDITER.
A4	0	W080103G	林 麗 美
	DATE	2008.02.21	SHEET 1 OF 1

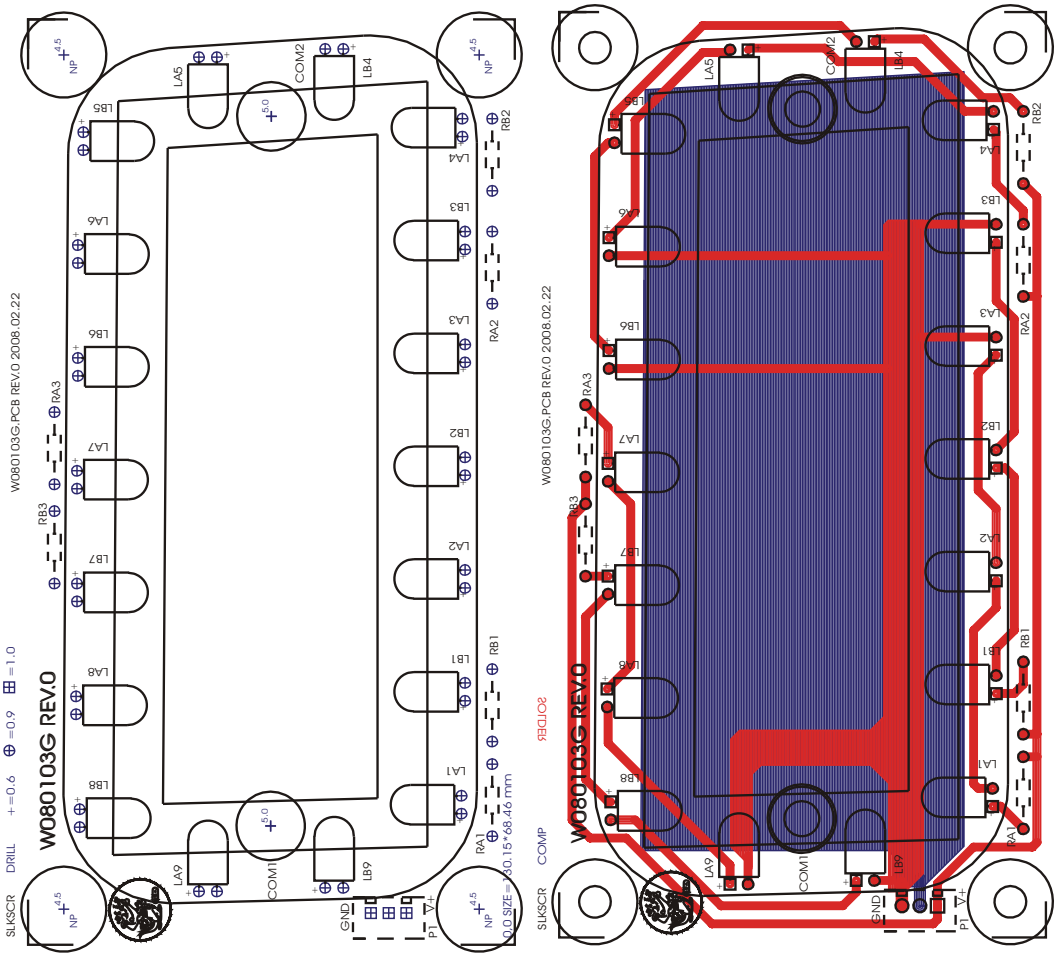
W080103G REV.0
W080103G.PCB REV.0 2008.02.22
SLKSCR
DRILL
+=0.6
=0.9
=1.0
0.0 SIZE=130.15*68.46 mm
COMP
SOLDER
LA1
LA2
LA3
LA4
LA5
LA6
LA7
LA8
LA9
LB1
LB2
LB3
LB4
LB5
LB6
LB7
LB8
LB9
COM1
COM2
RA1
RA2
RA3
RB1
RB2
RB3
GND
P1
V+
NP

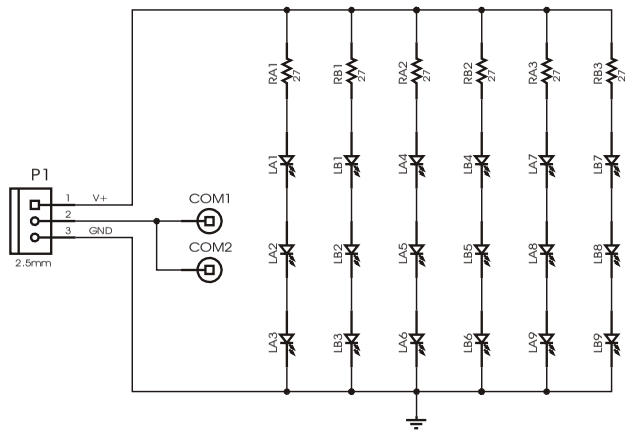

SIZE	REV	FILE NAME.	EDITER.
A4	0	W080103H	林 麗 美
	DATE	2008.02.22	SHEET 1 OF 1

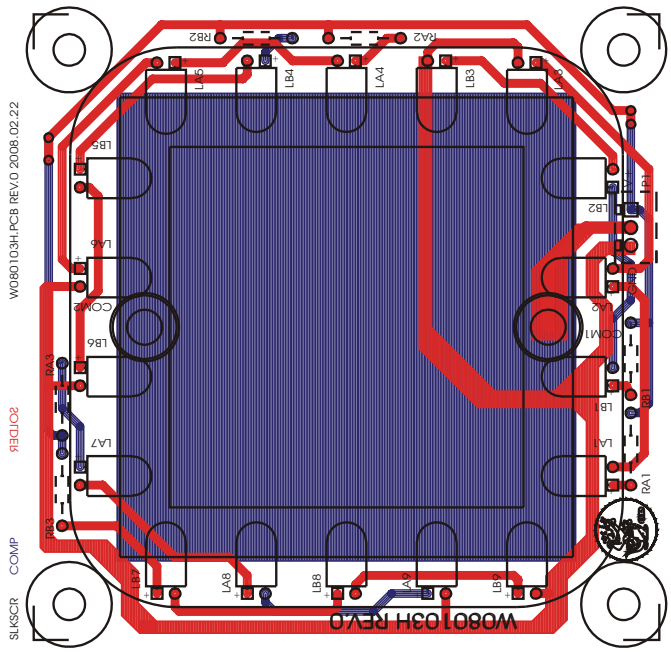
W080103H.PCB REV.0 2008.02.22
SOLDER
COMP
SLKSCR
W080103H REV.0
RB2
RA2
LA5
LB4
LA4
LB3
LA3
LB5
LA6
COM2
LB6
RA3
LA7
RB3
LB7
LA8
LB8
LA9
LB9
LB2
LA2
COM1
LB1
LA1
RA1
RB1
GND
P1

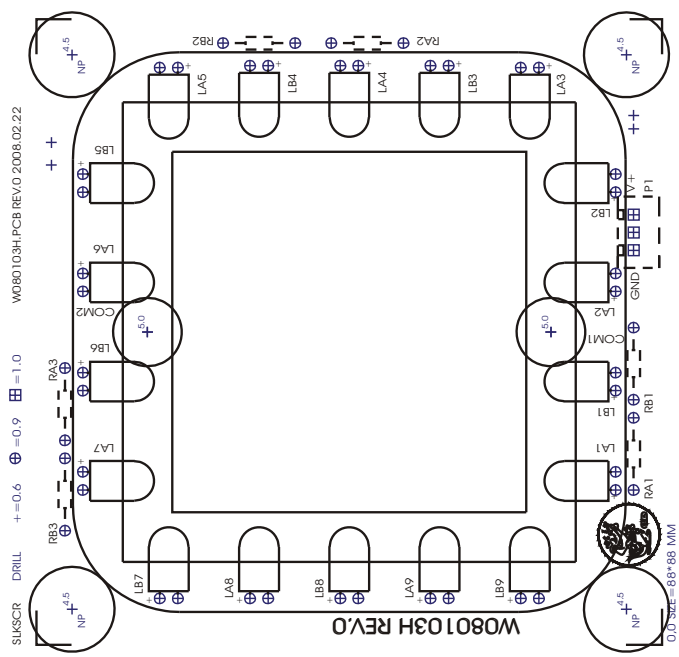
W080103H.PCB REV.0 2008.02.22
SLKSCR
DRILL
+=0.6
=0.9
=1.0
W080103H REV.0
RB2
RA2
LA5
LB4
LA4
LB3
LA3
LB5
LA6
COM2
LB6
RA3
LA7
RB3
LB7
LA8
LB8
LA9
LB9
LB2
LA2
COM1
LB1
LA1
RA1
RB1
GND
P1
0.0 SIZE=88*88 MM

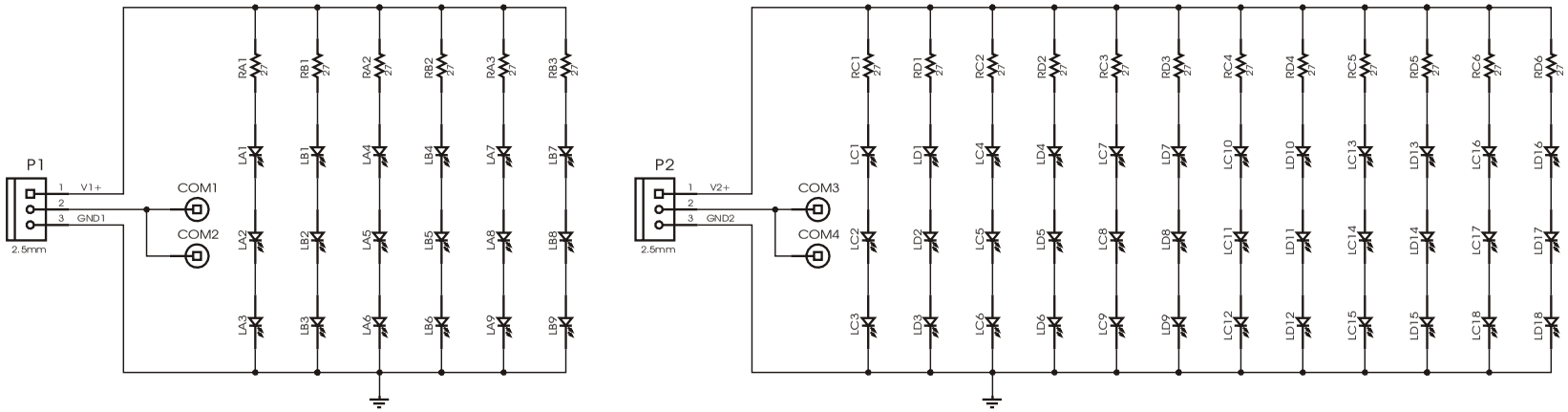

SIZE	REV	FILE NAME.	EDITER.
A4	0	W080103I	林 麗 美
	DATE	2008.02.22	SHEET 1 OF 1

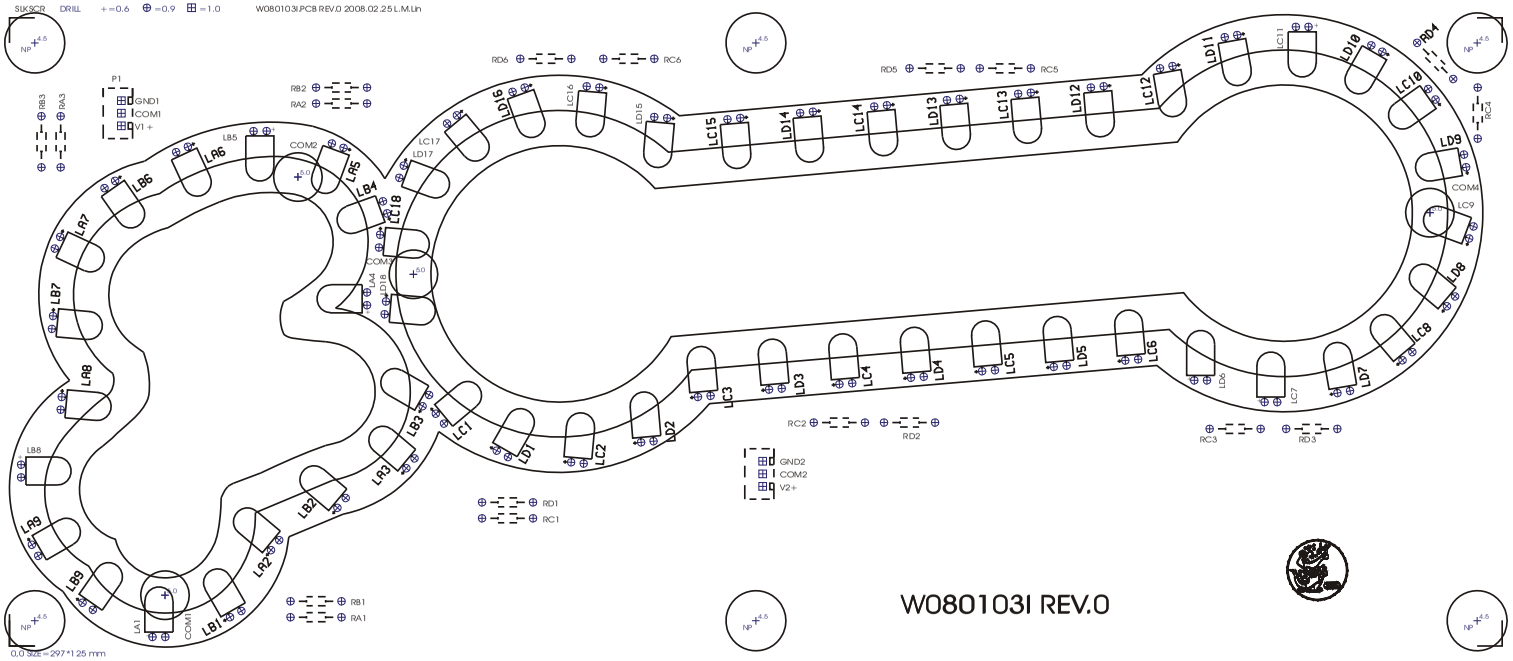
SILKSCR
DRILL
+=0.6
=0.9
=1.0
W080103I.PCB REV.0 2008.02.25 L.M.Lin
W080103I REV.0
0,0 size = 297*125 mm

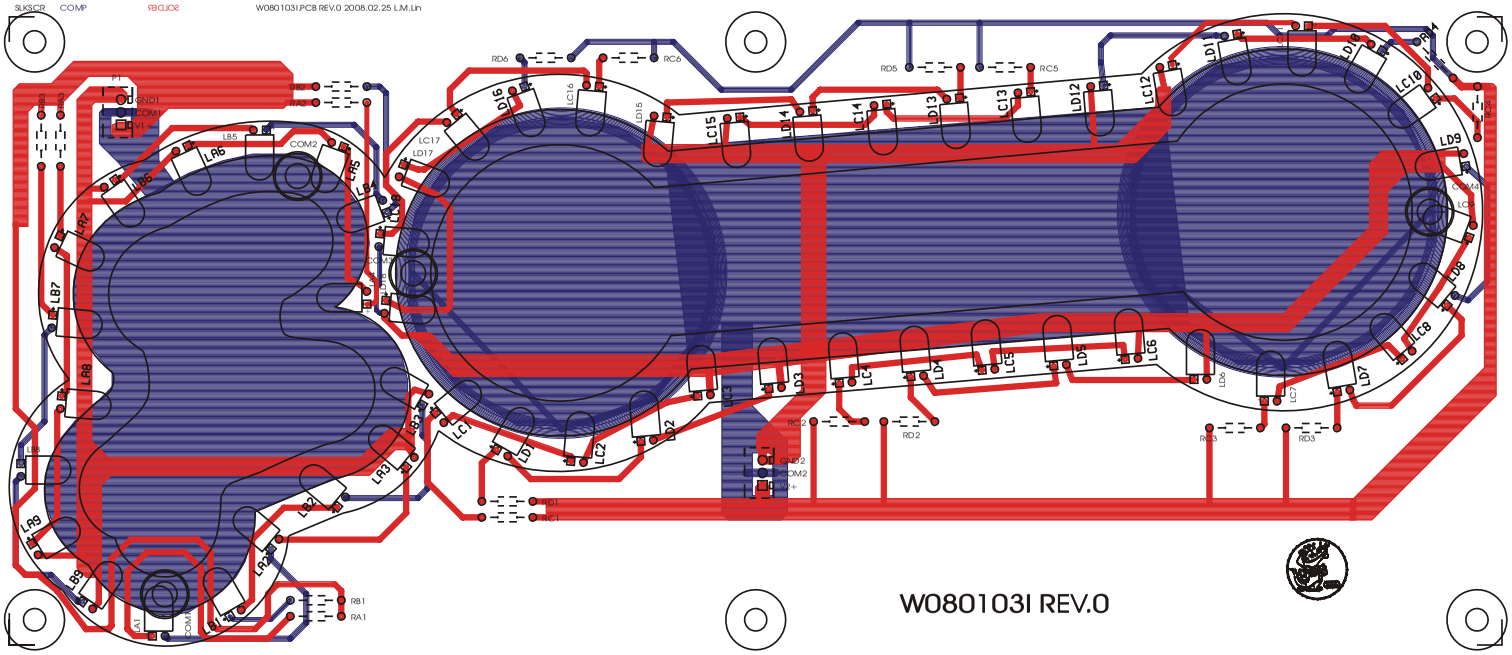
SILKSCR
COMP
SOLDER
W080103I.PCB REV.0 2008.02.25 L.M.Lin
W080103I REV.0

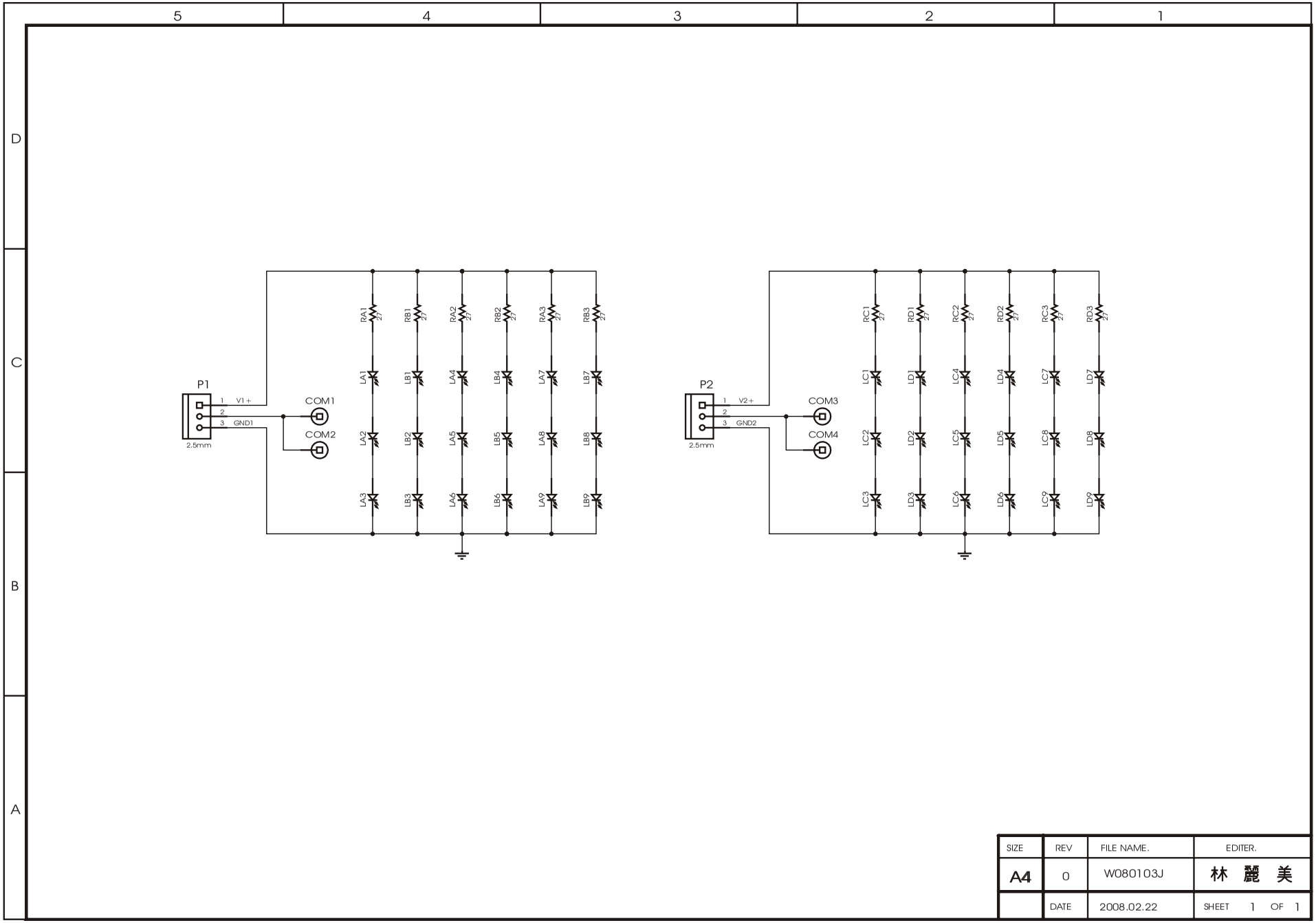
5
4
3
2
1
D
C
B
A
P1
1 V1+
2
3 GND1
2.5mm
COM1
COM2
RA1 27
RB1 27
RA2 27
RB2 27
RA3 27
RB3 27
LA1
LB1
LA4
LB4
LA7
LB7
LA2
LB2
LA5
LB5
LA8
LB8
LA3
LB3
LA6
LB6
LA9
LB9
P2
1 V2+
2
3 GND2
2.5mm
COM3
COM4
RC1 27
RD1 27
RC2 27
RD2 27
RC3 27
RD3 27
LC1
LD1
LC4
LD4
LC7
LD7
LC2
LD2
LC5
LD5
LC8
LD8
LC3
LD3
LC6
LD6
LC9
LD9
SIZE
A4
REV
0
FILE NAME.
W080103J
EDITER.
林 麗 美
DATE
2008.02.22
SHEET 1 OF 1

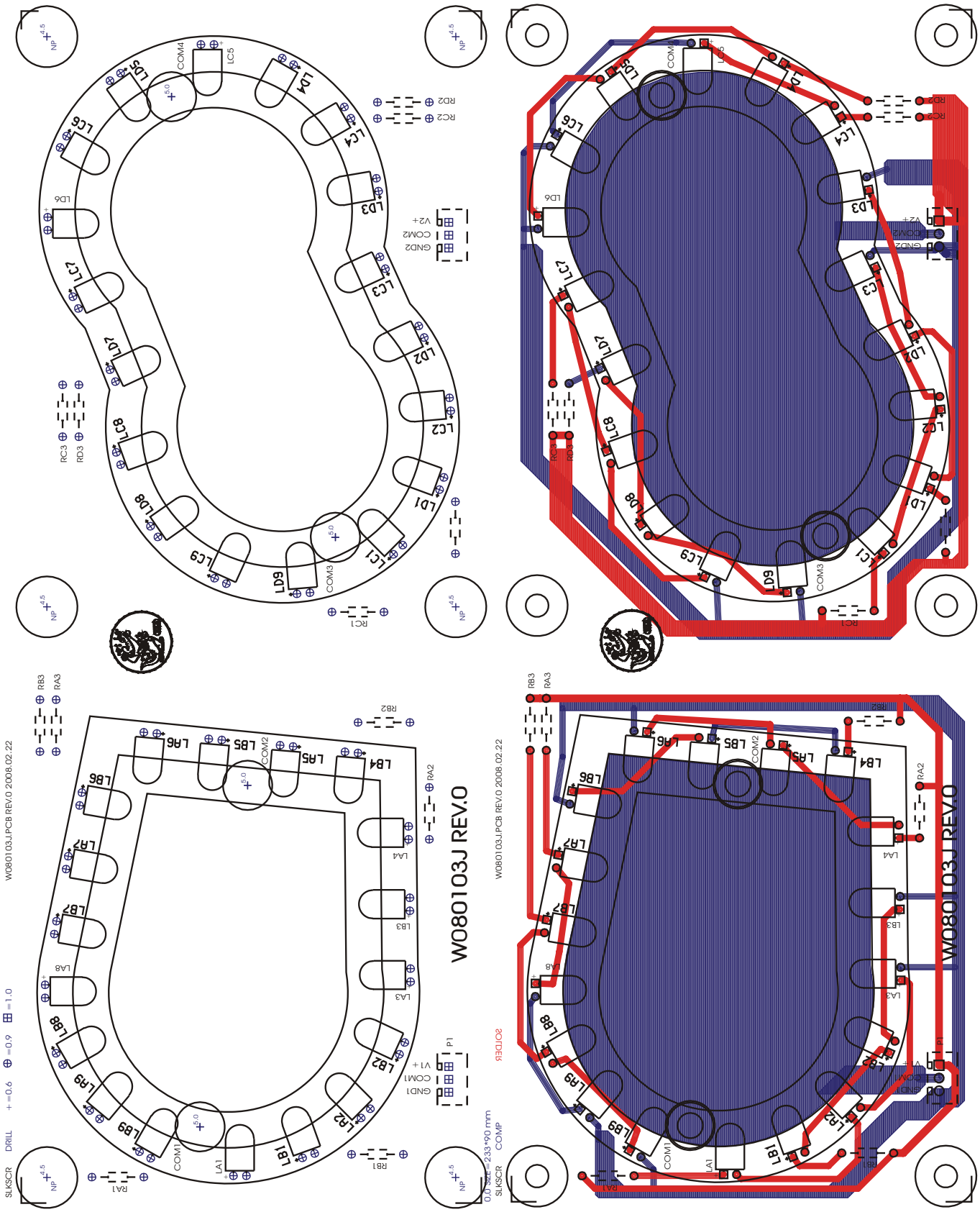
W080103J REV.0
W080103J.PCB REV.0 2008.02.22
SLKSCR
DRILL
+=0.6
=0.9
=1.0
0.0 SIZE=233*90 mm
COMP
SOLDER

W08010 3A.PCB 2008.01.21 L.M.L:in
0.1=⊞ 0.0=⊕ KEEPOUT SOLDER
SLKSCR SOLDER
0.VER REV:0
0,0 SIZE=60*90 MM
D1
D2
D3
D4
D5
D6
D7
D8
D9
D10
D11
D12
D13
D14
D15
R1
R2
R3
R4
R5
J1
J2
J3
J4
J5
J6
J7
J8
J9
J10
J11
J12
J13
J14
J15
J16
J17
J18
J19
J20
J21
J22
J23
J24
J25
J26
J27
J28
J29
J30
J31
J32
J33
J34
J35
J36
J37
J38
J39
J40

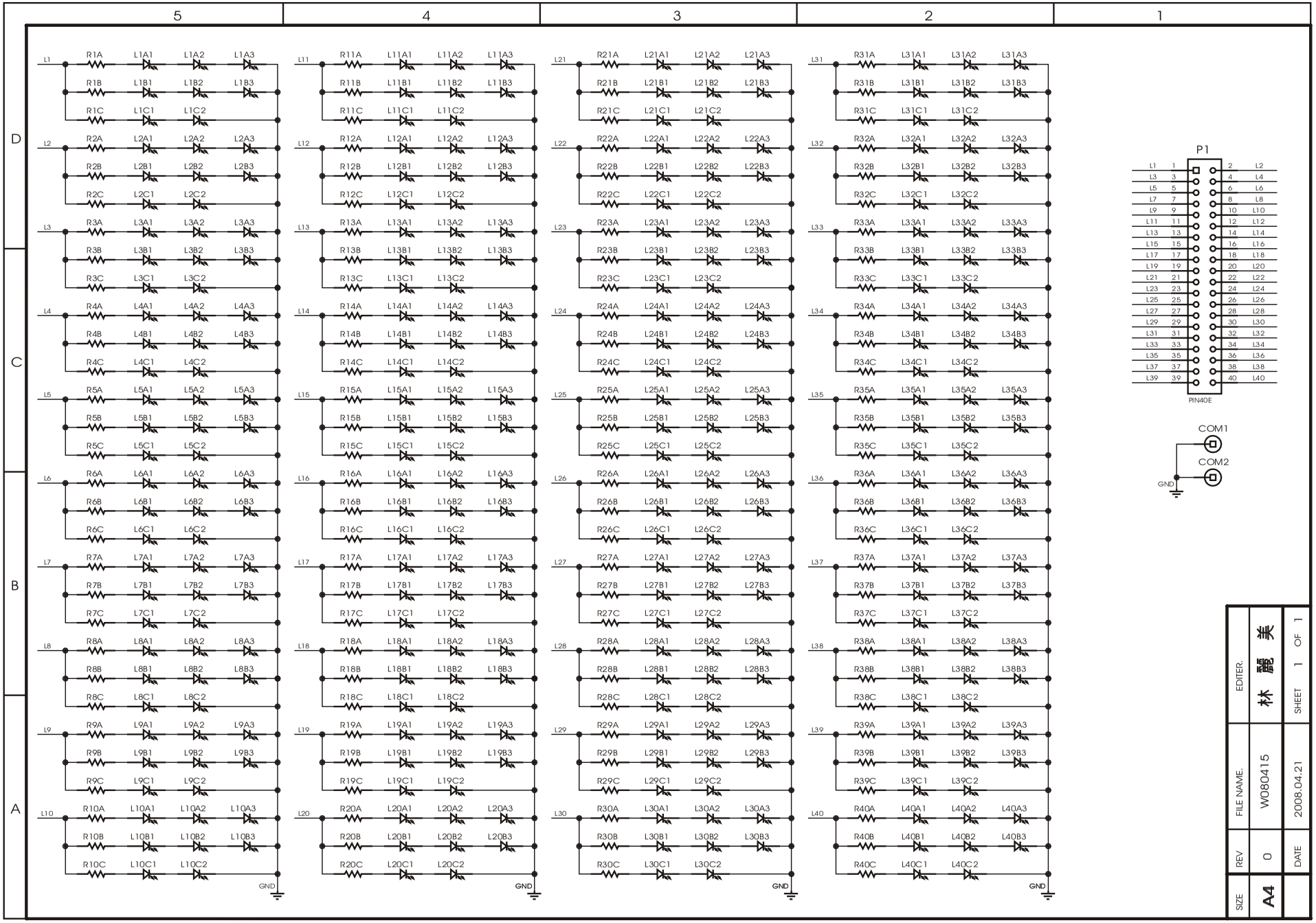
5
4
3
2
1
D
C
B
A
L1 R1A L1A1 L1A2 L1A3 R1B L1B1 L1B2 L1B3 R1C L1C1 L1C2
L2 R2A L2A1 L2A2 L2A3 R2B L2B1 L2B2 L2B3 R2C L2C1 L2C2
L3 R3A L3A1 L3A2 L3A3 R3B L3B1 L3B2 L3B3 R3C L3C1 L3C2
L4 R4A L4A1 L4A2 L4A3 R4B L4B1 L4B2 L4B3 R4C L4C1 L4C2
L5 R5A L5A1 L5A2 L5A3 R5B L5B1 L5B2 L5B3 R5C L5C1 L5C2
L6 R6A L6A1 L6A2 L6A3 R6B L6B1 L6B2 L6B3 R6C L6C1 L6C2
L7 R7A L7A1 L7A2 L7A3 R7B L7B1 L7B2 L7B3 R7C L7C1 L7C2
L8 R8A L8A1 L8A2 L8A3 R8B L8B1 L8B2 L8B3 R8C L8C1 L8C2
L9 R9A L9A1 L9A2 L9A3 R9B L9B1 L9B2 L9B3 R9C L9C1 L9C2
L10 R10A L10A1 L10A2 L10A3 R10B L10B1 L10B2 L10B3 R10C L10C1 L10C2
GND
L11 R11A L11A1 L11A2 L11A3 R11B L11B1 L11B2 L11B3 R11C L11C1 L11C2
L12 R12A L12A1 L12A2 L12A3 R12B L12B1 L12B2 L12B3 R12C L12C1 L12C2
L13 R13A L13A1 L13A2 L13A3 R13B L13B1 L13B2 L13B3 R13C L13C1 L13C2
L14 R14A L14A1 L14A2 L14A3 R14B L14B1 L14B2 L14B3 R14C L14C1 L14C2
L15 R15A L15A1 L15A2 L15A3 R15B L15B1 L15B2 L15B3 R15C L15C1 L15C2
L16 R16A L16A1 L16A2 L16A3 R16B L16B1 L16B2 L16B3 R16C L16C1 L16C2
L17 R17A L17A1 L17A2 L17A3 R17B L17B1 L17B2 L17B3 R17C L17C1 L17C2
L18 R18A L18A1 L18A2 L18A3 R18B L18B1 L18B2 L18B3 R18C L18C1 L18C2
L19 R19A L19A1 L19A2 L19A3 R19B L19B1 L19B2 L19B3 R19C L19C1 L19C2
L20 R20A L20A1 L20A2 L20A3 R20B L20B1 L20B2 L20B3 R20C L20C1 L20C2
GND
L21 R21A L21A1 L21A2 L21A3 R21B L21B1 L21B2 L21B3 R21C L21C1 L21C2
L22 R22A L22A1 L22A2 L22A3 R22B L22B1 L22B2 L22B3 R22C L22C1 L22C2
L23 R23A L23A1 L23A2 L23A3 R23B L23B1 L23B2 L23B3 R23C L23C1 L23C2
L24 R24A L24A1 L24A2 L24A3 R24B L24B1 L24B2 L24B3 R24C L24C1 L24C2
L25 R25A L25A1 L25A2 L25A3 R25B L25B1 L25B2 L25B3 R25C L25C1 L25C2
L26 R26A L26A1 L26A2 L26A3 R26B L26B1 L26B2 L26B3 R26C L26C1 L26C2
L27 R27A L27A1 L27A2 L27A3 R27B L27B1 L27B2 L27B3 R27C L27C1 L27C2
L28 R28A L28A1 L28A2 L28A3 R28B L28B1 L28B2 L28B3 R28C L28C1 L28C2
L29 R29A L29A1 L29A2 L29A3 R29B L29B1 L29B2 L29B3 R29C L29C1 L29C2
L30 R30A L30A1 L30A2 L30A3 R30B L30B1 L30B2 L30B3 R30C L30C1 L30C2
GND
L31 R31A L31A1 L31A2 L31A3 R31B L31B1 L31B2 L31B3 R31C L31C1 L31C2
L32 R32A L32A1 L32A2 L32A3 R32B L32B1 L32B2 L32B3 R32C L32C1 L32C2
L33 R33A L33A1 L33A2 L33A3 R33B L33B1 L33B2 L33B3 R33C L33C1 L33C2
L34 R34A L34A1 L34A2 L34A3 R34B L34B1 L34B2 L34B3 R34C L34C1 L34C2
L35 R35A L35A1 L35A2 L35A3 R35B L35B1 L35B2 L35B3 R35C L35C1 L35C2
L36 R36A L36A1 L36A2 L36A3 R36B L36B1 L36B2 L36B3 R36C L36C1 L36C2
L37 R37A L37A1 L37A2 L37A3 R37B L37B1 L37B2 L37B3 R37C L37C1 L37C2
L38 R38A L38A1 L38A2 L38A3 R38B L38B1 L38B2 L38B3 R38C L38C1 L38C2
L39 R39A L39A1 L39A2 L39A3 R39B L39B1 L39B2 L39B3 R39C L39C1 L39C2
L40 R40A L40A1 L40A2 L40A3 R40B L40B1 L40B2 L40B3 R40C L40C1 L40C2
GND
P1
L1 1 2 L2
L3 3 4 L4
L5 5 6 L6
L7 7 8 L8
L9 9 10 L10
L11 11 12 L12
L13 13 14 L14
L15 15 16 L16
L17 17 18 L18
L19 19 20 L20
L21 21 22 L22
L23 23 24 L24
L25 25 26 L26
L27 27 28 L28
L29 29 30 L30
L31 31 32 L32
L33 33 34 L34
L35 35 36 L36
L37 37 38 L38
L39 39 40 L40
PIN40E
COM1
COM2
GND
SIZE A4
REV 0
FILE NAME: W080415
EDITER: 林麗美
DATE 2008.04.21
SHEET 1 OF 1

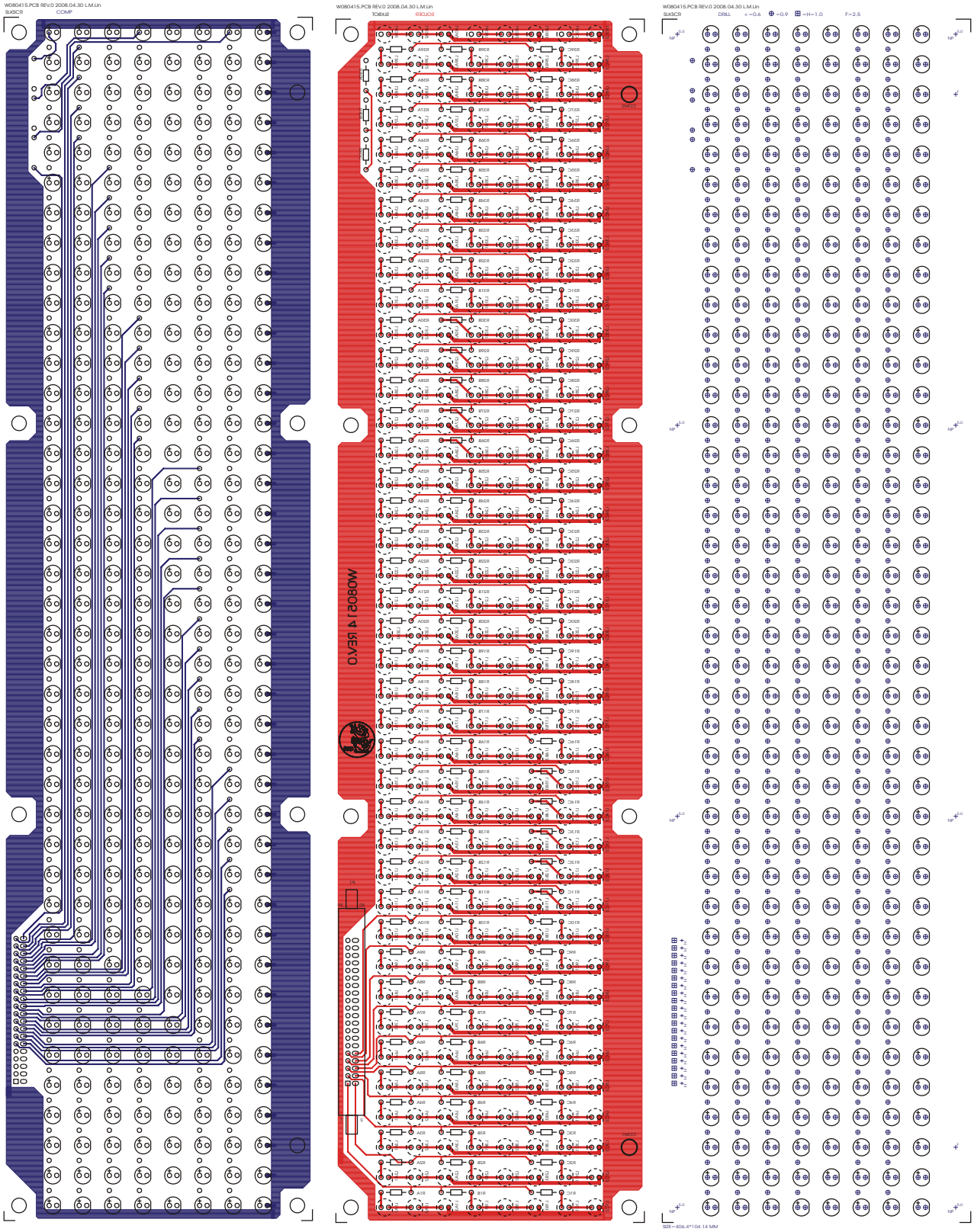
W080415.PCB REV.0 2008.04.30 L.M.Lin
SILKSCR
COMP
W080415.PCB REV.0 2008.04.30 L.M.Lin
BOTTOM
SOLDER
W080415.PCB REV.0 2008.04.30 L.M.Lin
SILKSCR
DRILL
=0.6
=0.9
=H=1.0
F=2.5
SIZE=406.4*104.14 MM

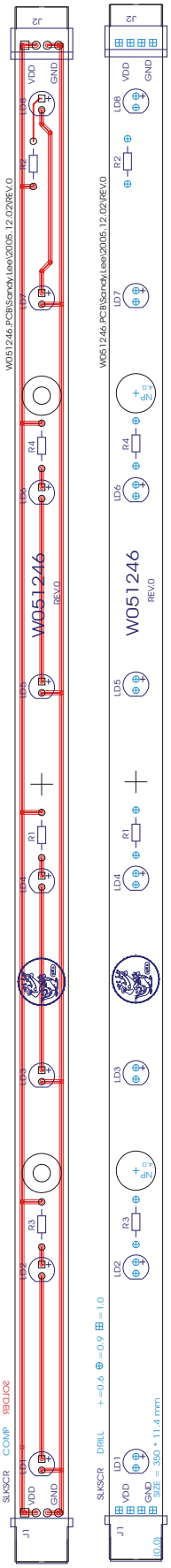
W051246.PCB\Sandy.Lee\2005.12.02\REV.0
W051246
REV.0
J1
J2
VDD
GND
LD1
LD2
LD3
LD4
LD5
LD6
LD7
LD8
R1
R2
R3
R4
SLKSCR
COMP
DRILL
SIZE = 350 * 11.4 mm