TABLE OF CONTENTS

- INTRODUCTION
- GAME SET UP / TESTING
- MAINTENANCE
- QUICK TROUBLESHOOTING
- GAME REPAIR
- PARTS LISTINGS
- SCHEMATICS
- WARANTY INFORMATION

INTRODUCTION

GAME FEATURES

This game has many outstanding features making it the perfect game for just about any location.

The game was designed with the location in mind, featuring unparalleled flexibility in regards to custom game set-up and programming. Virtually all game play, and ticket dispensing options are operator adjustable, practically letting the operator "build his own game".

CYCLONE™ has many unique features for a "Ticket Spitter" type of game. Its Centerpiece design sets it apart from all other games in this category. Its Game Play, which is ALL SKILL, having no bounces, rolls, flips, or other chancy situations, also showcases its creative design. These, and other features, give the players something that keep them playing time and time again.

Reliability - is the key word in the design of this game. The electronics in the game have been extensively tested to assure years of trouble free service. The light ring light bulbs are powered using special circuitry and voltages to greatly enhance their life. The neon bulbs used should last over the life of the game.

The cabinet has been designed using only the finest materials available. The durable scratch resistant painted surfaces will last for years. The dome is made from LEXAN™, an almost indestructible material.

Game set-up is a snap. Just plug in, set a few programmable options, and you're ready to go. Even the programming options are easy to understand and adjust.

A "Tickets owed Display" is used for each station to show tickets owed to the player. More on this feature is given in the following game play section.

GAME PLAY

The game begins when the player has inserted enough money to create 1 "credit".

The game has a ring of light bulbs encircling the playfield. A lit bulb circles this ring every second and a half. The object of the game is to stop the light between two neon arches located in the middle of your play zone.

Each light bulb in your zone has a "ticket" value associated with it. As you get closer to the 2 neon arches in the center of your zone, the ticket value increases. Between the two neon arches described above is the game JACKPOT. This is where a large number of tickets can be won.

Once the game begins you have 1 chance to stop the light (for each credit inserted). Wherever the light stops is how many tickets the game pays out. Each time the Jackpot is NOT hit, the Jackpot value increases by 1 or more tickets, (if the incrementing Jackpot option is selected). When the jackpot is hit, a Jackpot routine including special lights and sounds is displayed.

Additional games can be played while tickerts are dispensing.

The game also has a unique "Tickets Owed" display. This display has many uses. When tickets are won, the amount won are displayed, and then counted down as the tickets are dispensed. This is a handy feature in the event that the game runs out of tickets while dispensing, or if the game is out of tickets. If the game cannot dispense the tickets it should, it will keep adding the number it should dispense to the tickets owed display, and thus allow the player to continue playing the game until an attendant can be contacted. This feature is also very helpful if the "do not dispense tickets on Jackpot" option is chosen. It may be desireable to NOT dispense tickets if the Jackpot is set to a very high number of tickets. This will be valuable, as the number of Jackpot tickets won would then be added to this display, then the ticket dispenser will lock until an attendant is located, and he resets the dispenser.

GAME SET-UP / TESTING

SAFETY PRECAUTIONS

IMPORTANT: FAILURE TO FOLLOW THESE DIRECTIONS CLOSELY COULD CAUSE SERIOUS DAMAGE TO YOU OR YOUR GAME.

WARNING: WHEN INSTALLING THIS GAME, A 3 PRONG GROUNDED RECEPTACLE MUST BE USED. FAILURE TO DO SO COULD RESULT IN SERIOUS INJURY TO YOURSELF OR OTHERS. FAILURE TO USE A GROUNDED RECEPTACLE COULD ALSO CAUSE IMPROPER GAME OPERATION, OR DAMAGE TO THE ELECTRONICS.

DO NOT DEFEAT OR REMOVE THE GROUNDING PRONG ON THE POWER CORD FOR THE SAME REASONS AS GIVEN ABOVE. USING AN IMPROPERLY GROUNDED GAME COULD VOID YOUR WARRANTY.

PAY SPECIAL ATTENTION TO THE SET UP SECTION BELOW, REGARDING VOLTAGE SETTINGS.

GAME SET-UP

BEFORE PLUGGING THE GAME IN, OR TURNING IT ON, BE SURE THE GAME HAS BEEN SET TO THE PROPER VOLTAGE. YOUR GAME SHOULD COME PRE-SET FROM THE FACTORY TO THE CORRECT VOLTAGE, HOWEVER IT IS A GOOD IDEA TO CHECK THE A.C. WALL RECEPTACLE VOLTAGE BEFORE PLUGGING THE GAME IN.

The game comes with 4 available voltage settings as described below. These settings Should be used to provide power in the correct range to the game without over or under powering it.

POWER RANGE	VOLTAGE SETTING
90 - 110 V.A.C.	110
110 - 130 V.A.C.	120
200- 220 V.A.C.	220
220- 240 V.A.C.	240

The game uses a POWER MODULE to handle all of the power distribution chores on the game. It incorporates an ON-OFF switch, primary A.C. game fusing, and power switching capabilities, for using the game with a wide variety of A.C. voltages by re-strapping the main transformer.

A.C. LINE VOLTAGE ADJUSTMENT

To adjust the game for a different A.C. voltage:

1. Unplug the game from the outlet.
2. Disconnect the power cord from the power module.
3. Using a small flat blade screwdriver, pry the fuse holder from the power module.
4. Notice a small window on the fuse holder with an arrow that points to the voltage the game is presently set at.
5. Using the small flat blade screwdriver, lift the retaining tab that holds the voltage selector in the fuse holder.
6. Rotate the voltage selector until the voltage you want is displayed in the voltage select window.
7. Push the voltage selector back into the fuse holder until it snaps into place. NOTE: Do not force the selector into the fuse holder. If it does not go in easily, it is not being installed correctly.
8. Snap the fuse holder assembly back into the power module.
9. Plug the power cord back into the receptacle in the power module, and into the wall outlet.

NOTE: WHEN CHANGING FROM 110-120 TO 220-240, LOWER THE MAIN FUSE VALUE BY 1/2.

WHEN CHANGING FROM 220-240 TO 110-120, DOUBLE THE MAIN FUSE VALUE.

GAME SET-UP / TESTING

PROGRAMMING YOUR GAME

This section will give you a detailed explanation on the functions and operating characteristics of each of the programming buttons. Please read this section carefully to avoid problems with your game.

NOTE: THE PROGRAMMING BUTTONS SHOWN BELOW MAY BE LOCATED EITHER ON THE MAIN P.C. BOARD AS ILLUSTRATED, OR ON A CONTROL BRACKET ATTACHED TO THE BLUE ACCESS DOOR.

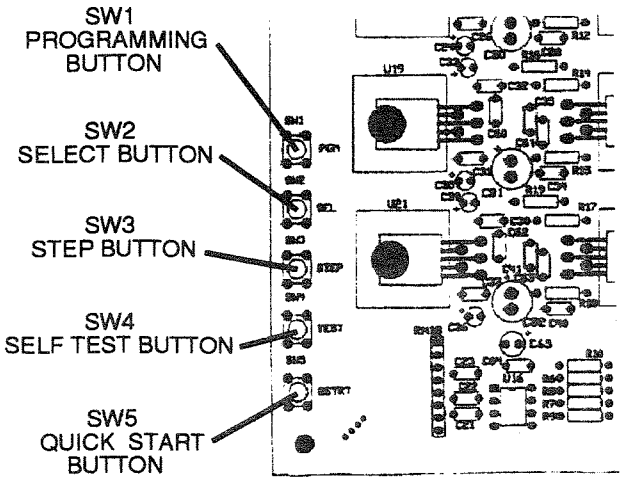

PROGRAMMING BUTTON (SW1)

This button is used to enter the "Programming" mode. It is located on the Main P.C. Board in the lower left hand corner, or on the blue access door of the game. Press this button once to enter the programming mode.

Once in this mode you can push SW2 or SW3 to make adjustments to the game.

To exit the programming mode and return to game play, push this button once again.

SELECT BUTTON (SW2)

This button is used to advance through all of the various programming option modes. Each push of this button, will move you to the next programmable option. The option number is displayed on the large "JACKPOT" display.

STEP BUTTON (SW3)

Each push of this button will advance you to the next available "value" for a particular programmable option. The value for that option is shown on the smaller "TICKETS OWED" display located on the control panel.

SELF TEST MODE (SW4)

When this button is pressed, the game goes into "Self Test" mode. In this mode, the game will advance the lights slowly, so it is easier to see if any light bulbs have burned out. Also, each push on any of the control panel push buttons will instigate a sound, to test each game sound, as well as each push button.

QUICK START (SW5)

When this button is pushed, a game will play, however NONE OF THE TICKET DISPENSERS, OR ANY COUNTERS WILL WORK. This allows game testing without affecting the games accountability. If ticket dispensers must be tested, then a normal game must be played.

GAME SET-UP / TESTING

OPTION MODES

Please read the setting information carefully BEFORE making any adjustments. Failure to set options properly can yield unexpected results.

PLEASE NOTE: THE VALUES PRE-SET AT THE FACTORY HAVE BEEN FOUND TO WORK BEST FOR MOST LOCATIONS.

MODE 1 (COINS PER CREDIT)

The number set in this option, is the number of coins necessary to earn 1 credit, and play 1 game. Setting a "0" in this mode will set the game in "Free Play" mode. The default for this mode is "1".

MODE 2 (VOLUME)

The number set in this mode controls the relative volume of the sound. "0" equals minimum, "9" equals maximum. As this button is pushed, a sound is played to make it easier to determine where the volume should be set. The default value for this mode is "5".

NOTE: THE SOUND IN THIS GAME CANNOT BE COMPLETELY TURNED OFF.

MODE 3 (ATTRACT MODE)

The attract mode in this game consists of the theme song being played whenever called to do so by the game program. The numbers in this mode represent minutes between attract modes. Setting a "0" in this mode turns the attract mode off. The default value in this mode is 3.

MODE 4-29 (ZONE VALUES)

The playfield is broken up into 3 "sections", 1 for each player station. Within each section, lies the center "Jackpot" zone, with a series of 26 lights, 13 to either side of it. Each light has a point value associated with it. Each light can be independently set for a point value different from that set at the factory. Each of these lights is a separate "zone".

Below is a table that indicates the 26 zones for each player station, and the associated "mode" number for each. Zone 1 is the furthest zone from the Jackpot to the left, while zone 26 is the furthest from the Jackpot to the right. Also in this table, are the default values for each zone.

LIGHT RING ZONE VALUES

MODE	ZONE	DEFAULT
4	1	1
5	2	2
6	3	2
7	4	3
8	5	3
9	6	4
10	7	4
11	8	5
12	9	5
13	10	6
14	11	7
15	12	8
16	13	10
17	14	10
18	15	8
19	16	7
20	17	6
21	18	5
22	19	5
23	20	4
24	21	4
25	22	3
26	23	3
27	24	2
28	25	2
29	26	1

Each zone can be set from 0 to 20. If values are changed from the factory default settings, it will be necessary to change the numbers indicated on the game by using the supplied decal overlay sheets.

MODE 30 (INITIAL JACKPOT VALUE)

The value shown is the value of the Jackpot (zone between the 2 center arches) when the game is first powered up, or just after a Jackpot is won. The default value for this mode is "100".

GAME SET-UP / TESTING

MODE 31 (JACKPOT INCREMENT)

The number shown here, is the amount of tickets the Jackpot value will increase by each time the game is played, and the Jackpot IS NOT WON. Setting a "0" for this mode will turn the incrementing feature off. The default value for this mode is "1".

MODE 32 (JACKPOT CAP)

The number shown in this mode is the maximum amount of tickets the game can dispense when hitting the Jackpot. Setting a "0" turns the cap off. The default value for this mode is "0".

MODE 33 (JACKPOT LOCK-UP)

This option allows the operator the choice of whether or not to dispense tickets when the jackpot is hit.

If the operator normally sets the jackpot to a very high value, he may not wish to dispense tickets when the Jackpot is hit. If the game has a lower Jackpot set, it is a good idea to let the game dispense tickets by itself.

It is usually better to let the game dispense tickets, as part of the fun in the game is watching all those tickets come out when the Jackpot is hit.

Setting a "1" dispenses tickets. Setting a "0" does not allow ticket dispensing when the jackpot is hit.

NOTE: WHEN THE GAME IS SET TO NOT DISPENSE TICKETS, THE TICKET DISPENSER RESET BUTTON MUST BE PRESSED AGAIN FOR THE GAME TO RESUME DISPENSING ANY TICKETS AT THAT STATION. EACH PLAYER STATION HAS A RESET BUTTON LOCATED ON THE COIN MECH HOLDER.

MODE 34 (JACKPOT DIFFICULTY)

To make the game easier or harder to win, this option should be adjusted.

The value displayed is equal to how many milliseconds the "WINDOW" to win the Jackpot is open. (A millisecond is 1/1000 of a second.) A setting of "1" is the hardest, and a setting of "20" is the easiest. The default value for this mode is "3".

MODE 35 (JACKPOT WINABILITY)

This mode adds a valuable feature to those locations that have large variations in age groups. Under normal circumstances, the operator sets up MODE 34 for the best payout for his location. However this may be to difficult for some age groups. There are also circumstances where the operator may want the jackpot to be won on an average of XXX amount of games. This option will allow for that. When this option is selected, no matter what window value is chosen in MODE 34, the game will open the window up to 20 milliseconds (easiest) every XXX games. Every XXX games, is the number you choose on this setting. A setting of "0" turns this option off. The default setting for this option is "0".

MODE 36 (CREDIT DISCOUNTING)

When this mode is enabled, the game will give you 1 free credit for every XXX coins inserted into the game AT ONCE. A setting of "0" turns this mode off.

Example: If "2" is chosen, for every 2 coins inserted, 1 free game will be given. If "4" is chosen, for every 4 coins inserted, 1 free game will be given.

The default value for this option is "0"

MODE 37 (JACKPOT MEMORY)

This option allows the game to revert to the initial Jackpot value, (see mode 17) or keep the last value shown on the display when the game is shut off. Setting a "0" resets the value, setting a "1" retains the value. The default value is "1".

GAME SET-UP / TESTING

MODE 38 (RESET ALL)

When this mode is selected, the game will revert to all factory default settings.

SET "1" THEN EXIT PROGRAMMING MODE TO RESET ALL VALUES TO FACTORY DEFAULT.

The default value for this mode is "0".

TESTING

After the initial programming adjustments have been made, it's time to test your game for proper operation.

1. Locate the game to it's permanent location.

2. Be sure the game has been properly plugged into a 3 prong grounded outlet, and that the receptacle is in good working order.

3. If using an extension cord, be sure it is a 3 prong grounded type of at least 16 Ga.. materials.

4. Adjust the leg levelers and lock into position.

5. Verify that the game is set up for the proper voltage, and turn power to the game on.

6. Insert coins at least ten times into each coin mech to assure proper operation. An audible sound should be heard each time a coin is dropped.

7. Check the coin counter (located inside the blue coin door) and check for proper operation.

8. Run tickets through each ticket dispenser by playing games at each station. Check that tickets do not get stuck behind ticket louver.

9. Check each ticket counter for proper operation.

10. Check to see that the proper amount of tickets are dispensed based on the numbers shown on the playfield.

11. Check that all door locks work smoothly.

12. Check game volume during busy time at location to set it at the proper level.

IF YOU HAVE ANY QUESTIONS OR COMMENTS REGARDING INSTALLATION OR PROPER FUNCTION OF THE GAME, PLEASE CALL OUR SERVICE DEPARTMENT AT 1-716-833-0441

MAINTENANCE

GENERAL MAINTENANCE

This game has been designed for an absolute minimum amount of maintenance.

The light ring light bulbs have been designed into the game in such a fashion as to greatly extend their life. However, eventually they will reach the end of their life span. When this time comes, you will notice that 2 or 3 bulbs have burned out within a couple of weeks time from each other. At this point, it is advisable to change all of the bulbs. The bulbs are a simple push in type, very easy to change, and very inexpensive. Changing all of the bulbs at once, will save you work in the long run, and keep the game looking good.

CLEANING

Regular cleaning of the game will keep it looking new, and greatly enhance its appeal.

Clean the dome with a spray type furniture polish. "Behold" is a very good cleaner. It will fill in minor scratches, and give the plastic surface a deeper, clearer look. Avoid using glass cleaners, as they dry out the plastic, and give it a hazy look.

Clean the cabinetry with a good cleaner such as fantastic or 409. A mold soapy solution can also be used.

NOTE: DO NOT USE ALCOHOL, THINNERS OF ANY KIND, OR PINBALL PLAYFIELD CLEANERS ON ANY OF THE CABINET SURFACES, ESPECIALLY THE DECALS.

QUICK TROUBLESHOOTING

PROBLEM	PROBABLE CAUSE	SOLUTION
NO GAME POWER	ON-OFF SWITCH ON GAME TURNED OFF A.C. POWER FUSE BLOWN GAME NOT PLUGGED IN OR CORD DAMAGED BAD TRANSFORMER TRANSFORMER HARNESS NOT CONNECTED BAD POWER MODULE	TURN POWER ON REPLACE WITH PROPER FUSE CHECK POWER CORD CHECK FOR PROPER VOLTAGES CHECK HARNESS REPLACE POWER MODULE
GAME WILL NOT TAKE MONEY OR GIVE CREDITS CORRECTLY.	BAD COIN SWITCH COIN DISCOUNTING OPTION SET WRONG COINS PER CREDIT SETTING INCORRECT BAD COIN MECHANISM LOOSE OR DAMAGED HARNESSING BAD MAIN P.C. BOARD BAD 5 VOLT POWER SUPPLY FUSE	CHECK W/METER OR REPLACE CHECK PROGRAMMABLE SETTING CHECK PROGRAMMABLE SETTING ADJUST OR REPLACE CHECK W/METER - REPAIR REPAIR OR REPLACE MAIN BOARD CHECK AND REPLACE FUSE
TICKETS DO NOT DISPENSE OR DISPENSE INCORRECTLY	ZONE VALUES SET UP INCORRECTLY TICKET RESET BUTTON NOT PUSHED TICKET DISPENSER OPTICAL SENSOR DIRTY TICKET DISPENSER HARNESSING BAD TICKET DISPENSER BAD BAD MAIN P.C. BOARD BAD 5 VOLT POWER SUPPLY FUSE	CHECK PROGRAMMABLE SETTING PRESS RESET BUTTON CLEAN OPTICAL SENSOR CHECK W/METER AND REPAIR REPLACE DISPENSER REPLACE MAIN P.C. BOARD CHECK AND REPLACE FUSE
NEON BULBS DO NOT LIGHT	BAD NEON BULB BAD NEON P.C. BOARD BAD MAIN P.C. BOARD BAD NEON POWER SUPPLY FUSE BAD NEON HARNESSING BAD 5 VOLT POWER SUPPLY FUSE	TEST BULB AND REPLACE REPLACE NEON P.C. BOARD REPLACE MAIN P.C. BOARD CHECK AND REPLACE FUSE CHECK W/METER AND REPAIR CHECK AND REPLACE FUSE
RING LIGHT BULBS DO NOT LIGHT	BAD LIGHT BULB BAD LIGHT RING P.C. BOARD BAD INTERCONNECT HARNESSING BAD MAIN P.C. BOARD LIGHT RING POWER SUPPLY FUSE BAD BAD 5 VOLT POWER SUPPLY FUSE	REPLACE LIGHT BULB REPLACE LIGHT RING P.C. BOARD CHECK W/METER AND REPAIR REPAIR OR REPLACE P.C. BOARD CHECK AND REPLACE FUSE CHECK AND REPLACE FUSE
SCORE DISPLAYS DO NOT WORK	BAD 12 VOLT STATION FUSE BAD 5 VOLT POWER SUPPLY FUSE BAD SCORE DISPLAY P.C. BOARD BAD MAIN P.C. BOARD BAD SCORE DISPLAY HARNESSING	CHECK AND REPLACE FUSE CHECK AND REPLACE FUSE REPAIR OR REPLACE P.C. BOARD REPAIR OR REPLACE P.C. BOARD CHECK W/METER AND REPAIR
JACKPOT LIGHT DOES NOT LIGHT	BAD 12 VOLT STATION FUSE BAD 5 VOLT POWER SUPPLY FUSE BAD SCORE DISPLAY P.C. BOARD BAD MAIN P.C. BOARD BAD SCORE DISPLAY HARNESSING	CHECK AND REPLACE FUSE CHECK AND REPLACE FUSE REPAIR OR REPLACE P.C. BOARD REPAIR OR REPLACE P.C. BOARD CHECK W/METER AND REPAIR
LOW / NO TICKET INDICATOR DOES NOT WORK	BAD INDICATOR L.E.D. L.E.D. INSTALLED BACKWARDS STATION HARNESSING BAD TICKET MICRO SWITCH BAD MAIN P.C. BOARD BAD	REPLACE L.E.D. REVERSE L.E.D. CHECK W/METER AND REPAIR REPLACE MICRO SWITCH REPAIR OR REPLACE P.C. BOARD
STORM STOPPER BUTTON DOES NOT STOP LIGHT	BAD BUTTON SWITCH BAD HARNESSING BAD MAIN P.C. BOARD	REPLACE SWITCH CHECK W/METER AND REPAIR REPAIR OR REPLACE P.C. BOARD

GAME REPAIR

WARNING: ALWAYS REMOVE POWER TO THE GAME BEFORE ATTEMPTING ANY SERVICE, UNLESS NEEDED FOR SPECIFIC TESTING. FAILURE TO OBSERVE THIS PRECAUTION COULD RESULT IN SERIOUS INJURY TO YOURSELF OR OTHERS.

OPERATIONAL BACKGROUND

The CYCLONE™ coin operated amusement game has been designed for an absolute minimum of service. Special circuitry prolongs the life of the incandescent light bulbs, In addition, the neon bulbs used have a life span measured in years.

The Main P.C. Board has been designed with 7 separate P.C. mounted power supplies, to segregate different areas of the electronics. In other words, if 1 station goes down, the other 2 stations will continue to work. If the sound goes down, the rest of the game will continue to play, etc. Additionally, the power supplies are all fan forced cooled.

The Light Ring P.C. Boards were designed to add reliability to the game, by eliminating the massive amount of wiring that would be needed for the 84 light ring bulbs used. The light sockets on the board were chosen to allow for the least expensive bulbs possible to be used. The boards were designed to change quickly and easily in the unlikely event that something would go wrong with one of them.

TROUBLESHOOTING PHILOSOPHY

To find problems with the game, always first check what should be obvious. See that the game is plugged in, and that all of the fuses on the game are good. This includes the fuse that is located INSIDE the power module.

Next, check to see that all of the connectors are firmly seated, and that none of the wires have pulled out of them.

When trying to find out if specific components are bad or not, try swapping them with components from another player station to see if the problem moves with the component, or stays where it was. This will help you to know if you have a problem with a specific component, or maybe a problem with either the wiring or the Main P.C. Board.

Use extreme caution when using probes or volt meters if the game is powered up. If doing continuity checks, it is important to disconnect the harnessing at both ends, as attached they may yield erroneous results.

If P.C. Boards are suspected as causing problems, check to see that all of the I.C. chips are firmly seated on the boards.

If light bulbs are suspected, swap them with one that is known to work to narrow the problem down to bulb or P.C. Board.

MAIN P.C. BOARD REPLACEMENT

1. Remove all A.C power from the game.

2. Carefully remove all of the connectors from the P.C. Board.

3. Remove the 4 long hexagon nuts that secure the board to the mounting bracket.

4. Gently pull the P.C. board from the mounting bracket.

5. Re-install in the reverse order.

LIGHT RING P.C. BOARD REPLACEMENT

NOTE: BE EXTREMELY CAREFUL NOT TO HIT A NEON BULB SOCKET FROM THE BOTTOM, AS THEY ARE RELATIVELY FRAGILE.

1. Remove all A.C power to the game.

2. Remove the harnesses to the suspected bad P.C. Board.

3. Remove the light bulbs from the bad board.

4. Remove the 4 screws that hold the P.C. board to the bottom of the playfield.

5. Re-assemble in reverse order.

GAME REPAIR

NEON BULB REPLACEMENT

WARNING: NEON TRANSFORMERS EMIT HIGH VOLTAGE.

BE CAREFUL WHEN SERVICING NEON TUBES AS THEY ARE MADE OF GLASS AND ARE THEREFORE VERY FRAGILE.

1. Remove all A.C. power to the game.

2. Remove the 2 single pin mate-lock connectors that connect the bad bulb to the neon transformer P.C. board.

3a. For "U" shaped bulbs, remove the 2 nuts that secure the sockets to the playfield.

3b. For pie shaped neons, unsnap the neon from the standoffs.

4. Remove the old neon and pull the wires up through the mounting or access holes.

5. When re-assembling the "U" shaped neon tubes, be sure to use the foam washer. I INSTALL THE MOUNTING NUTS LOOSELY. THE NEON SHOULD ROCK BACK AND FORTH SLIGHTLY WHEN INSTALLED PROPERLY.

6. When re-assembling the pie shaped neons, snap the neon into the standoffs evenly, the 2 closest to the outside first, then the 2 closest to the center.

7. Re-connect the wires to the neon transformer P.C. board and test for proper operation.

NEON TRANSFORMER P.C. BOARD REPLACEMENT

NOTE: BE CAREFUL WHEN SERVICING THE NEON TRANSFORMER P.C. BOARD, AS THE BOARD CONTAINS SMALL DIAMETER WIRES THAT COULD BECOME BROKEN WITH ROUGH HANDLING.

BEFORE REMOVING ANY CONNECTORS, NOTE EXACTLY WHERE THEY WERE REMOVED FROM, SO THE LIGHTS WILL LIGHT IN THE PROPER SEQUENCE WHEN RE-INSTALLED.

1. Remove all A.C. power from the game.

2. Remove the Harnessing from the Main P.C. Board with the mate-lock connectors.

3. Remove the 3 , six pin mate-lock connectors.

4. Remove the 6 single pin mate-lock connectors.

5. Remove the 4 corner screws that hold. the neon board to the bottom of the playfield. NOTE: THE 4 SCREWS (IN THE CENTER OF EACH SIDE OF THE BOARD) DO NOT COME OUT.

6. Re-assemble in reverse order. NOTE: BE SURE THE BULBS LIGHT IN THE PROPER SEQUENCE.

BULB SEQUENCE

1. The neon arches at the center of each Jackpot zone should alternately flash on and off.

2. The neon arches between the 3 player stations should remain lit.

3. When the Jackpot is hit, the neons should pulse from the far side of the game, to the jackpot area.

4. The pie shaped neon should light only when the ring light is lit in its zone.

CONTROL PANEL P.C. BOARD REPLACEMENT

1. Remove all A.C. power to the game.

2. Remove the 2 mate-lock connectors to the P.C. board.

3. Remove the 4 long hexagon nuts that hold the board to the bottom of the control panel.

4. Carefully slide the board from the mounting studs.

5. Re-assemble in the reverse order.

JACKPOT DISPLAY P.C. BOARD REPLACEMENT

1. Remove all A.C. power to the game.

2. Remove the Dome.

3. Remove the 4 screws that hold the printed filter on the Jackpot display housing.

4. Remove the 4 hexagon screws that hold the Board to the housing, and remove the board.

5. Remove the mate-lock connectors.

6. Re-assemble in reverse order.

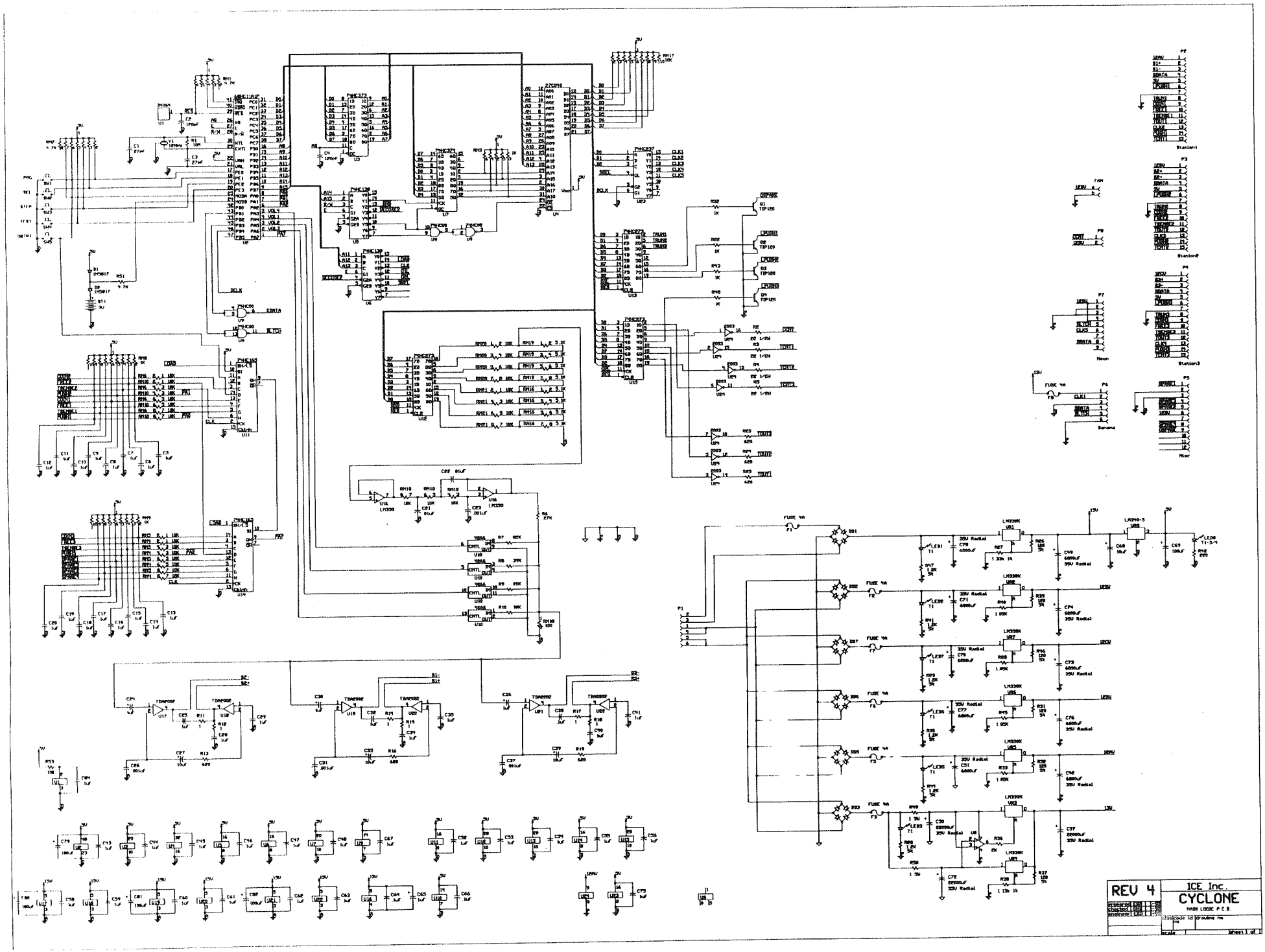
REV 4
ICE Inc.
CYCLONE
MAIN LOGIC P.C.B.
Station1
Station2
Station3
Neon
Banana
Mic

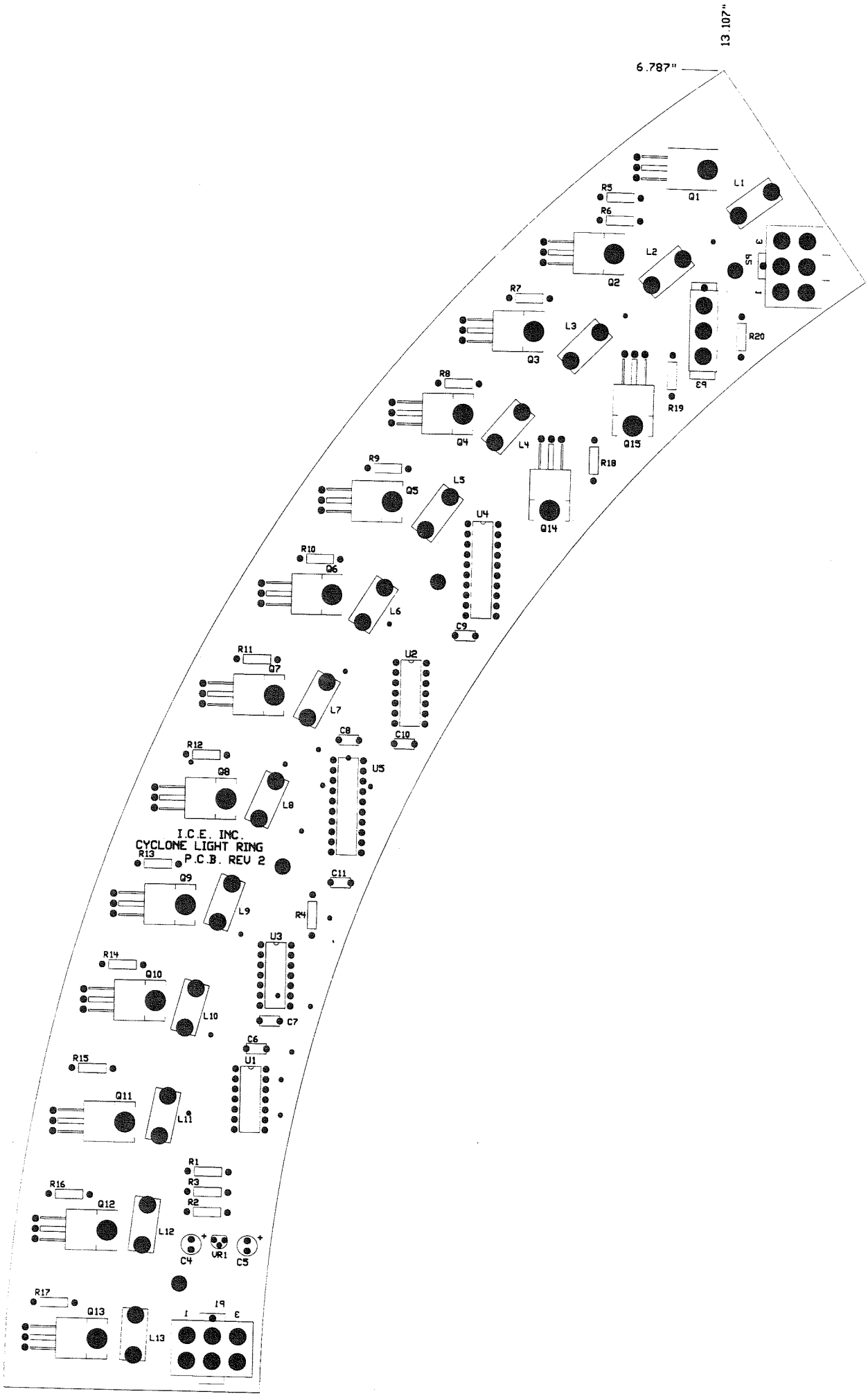
13.107"
6.787"
Q1
L1
R5
R6
Q2
L2
J5
3
1
R7
Q3
L3
R20
R8
Q4
L4
Q15
R19
J3
R18
R9
Q5
L5
Q14
U4
R10
Q6
L6
C9
R11
Q7
L7
U2
C8
C10
R12
Q8
L8
U5
I.C.E. INC.
CYCLONE LIGHT RING
P.C.B. REV 2
R13
Q9
L9
C11
R4
U3
R14
Q10
L10
C7
C6
R15
U1
Q11
L11
R1
R16
R3
Q12
R2
L12
C4
VR1
C5
R17
Q13
L13
J9
1
3

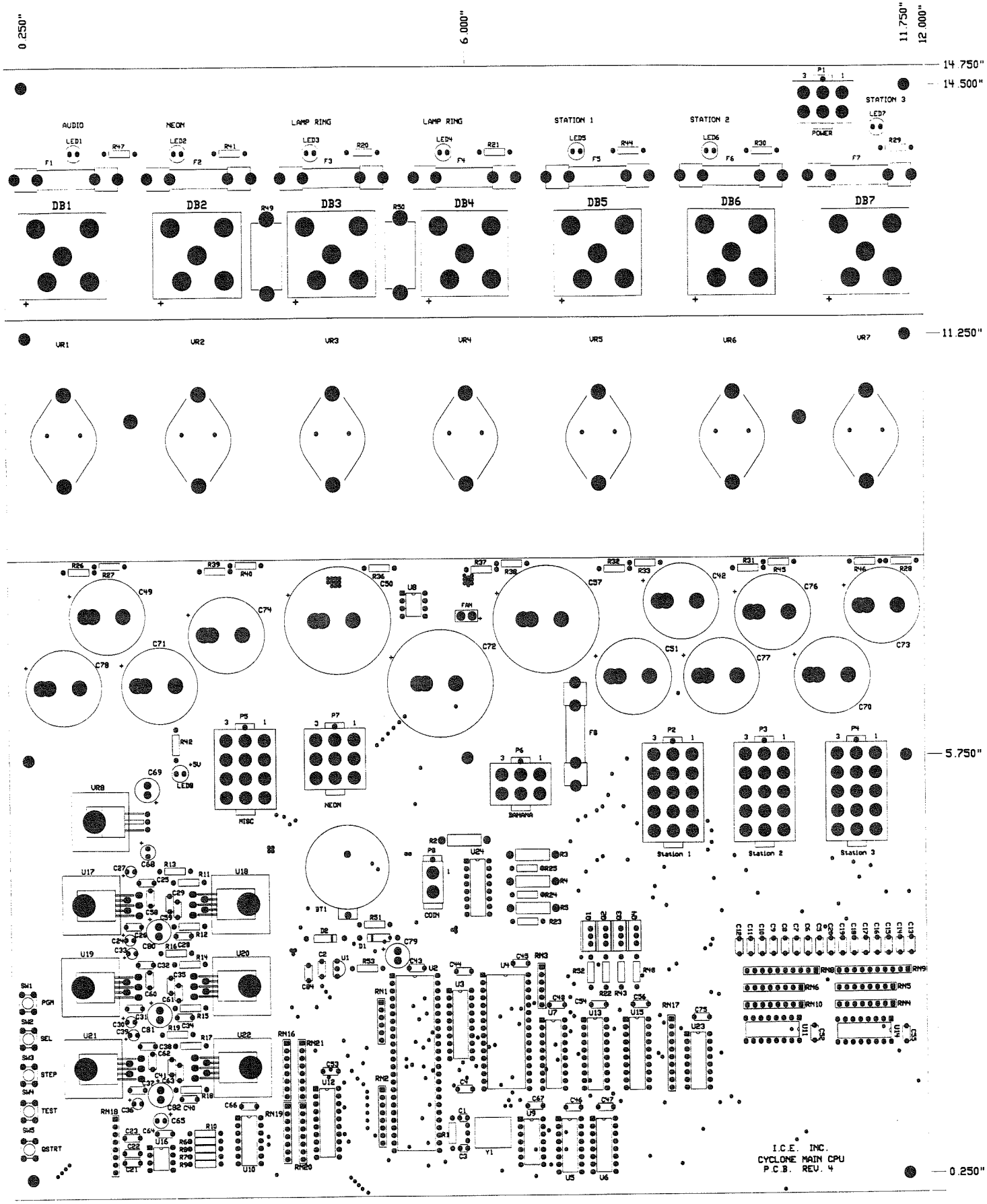
0.250"
6.000"
11.750"
12.000"
14.750"
14.500"
11.250"
5.750"
0.250"
AUDIO
NEON
LAMP RING
LAMP RING
STATION 1
STATION 2
STATION 3
POWER
DB1
DB2
DB3
DB4
DB5
DB6
DB7
VR1
VR2
VR3
VR4
VR5
VR6
VR7
MISC
NEON
BANANA
Station 1
Station 2
Station 3
COIN
PGM
SEL
STEP
TEST
QSTRT
I.C.E. INC.
CYCLONE MAIN CPU
P.C.B. REV. 4

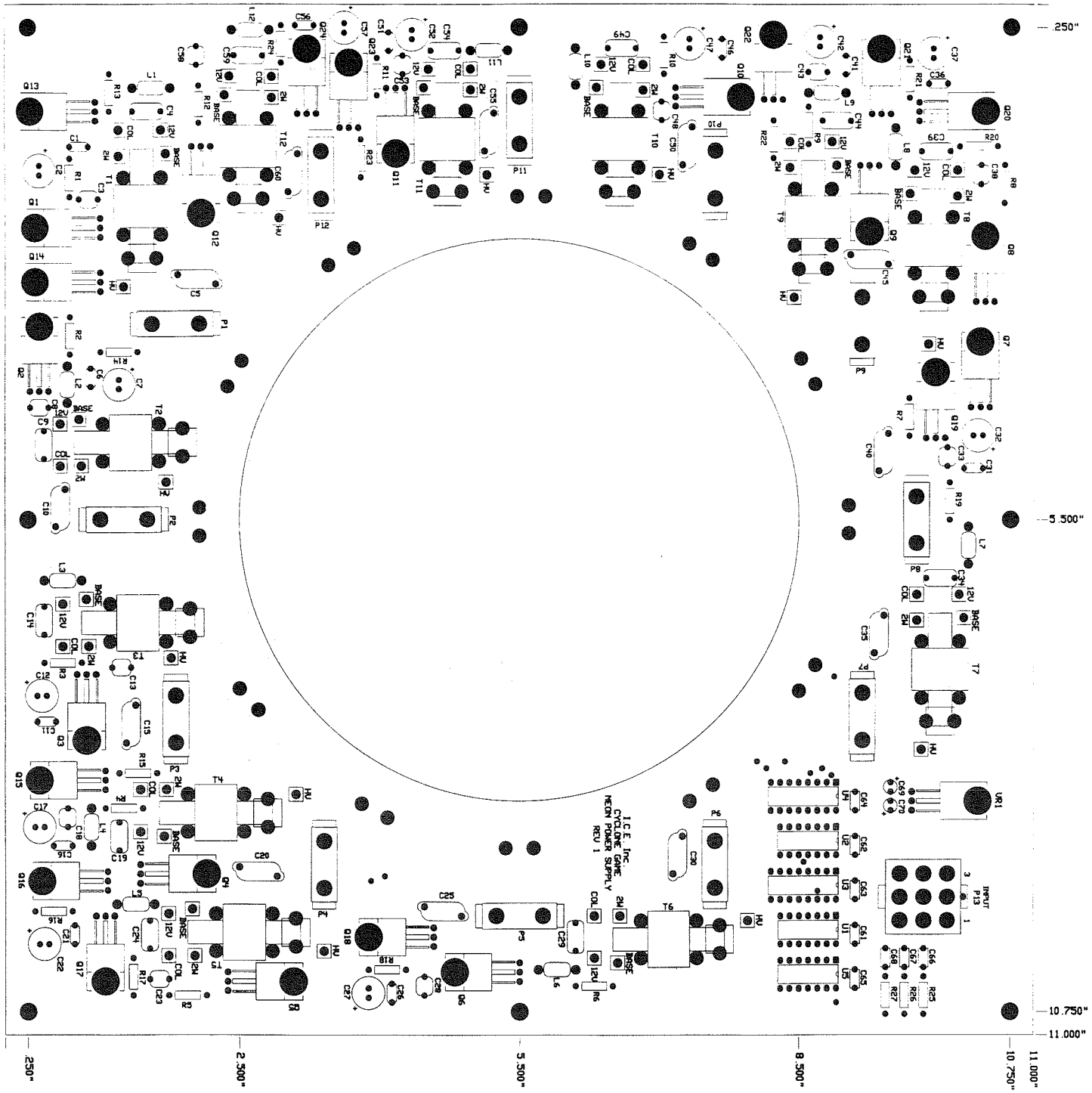
I.C.E. Inc.
CYCLONE GAME
NEON POWER SUPPLY
REV 1
INPUT
.250"
5.500"
10.750"
11.000"
.250"
2.500"
5.500"
8.500"
10.750"
11.000"

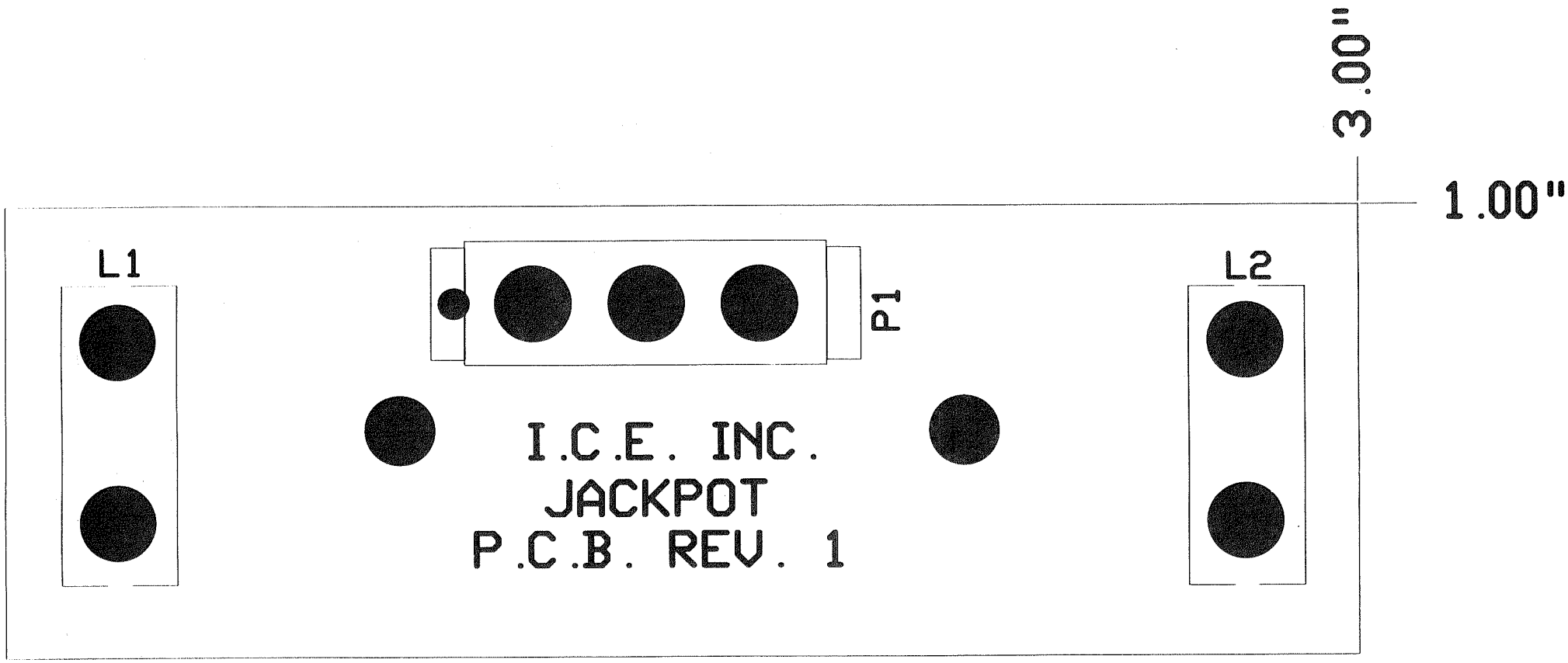
3.00"
1.00"
L1
P1
L2
I.C.E. INC.
JACKPOT
P.C.B. REV. 1

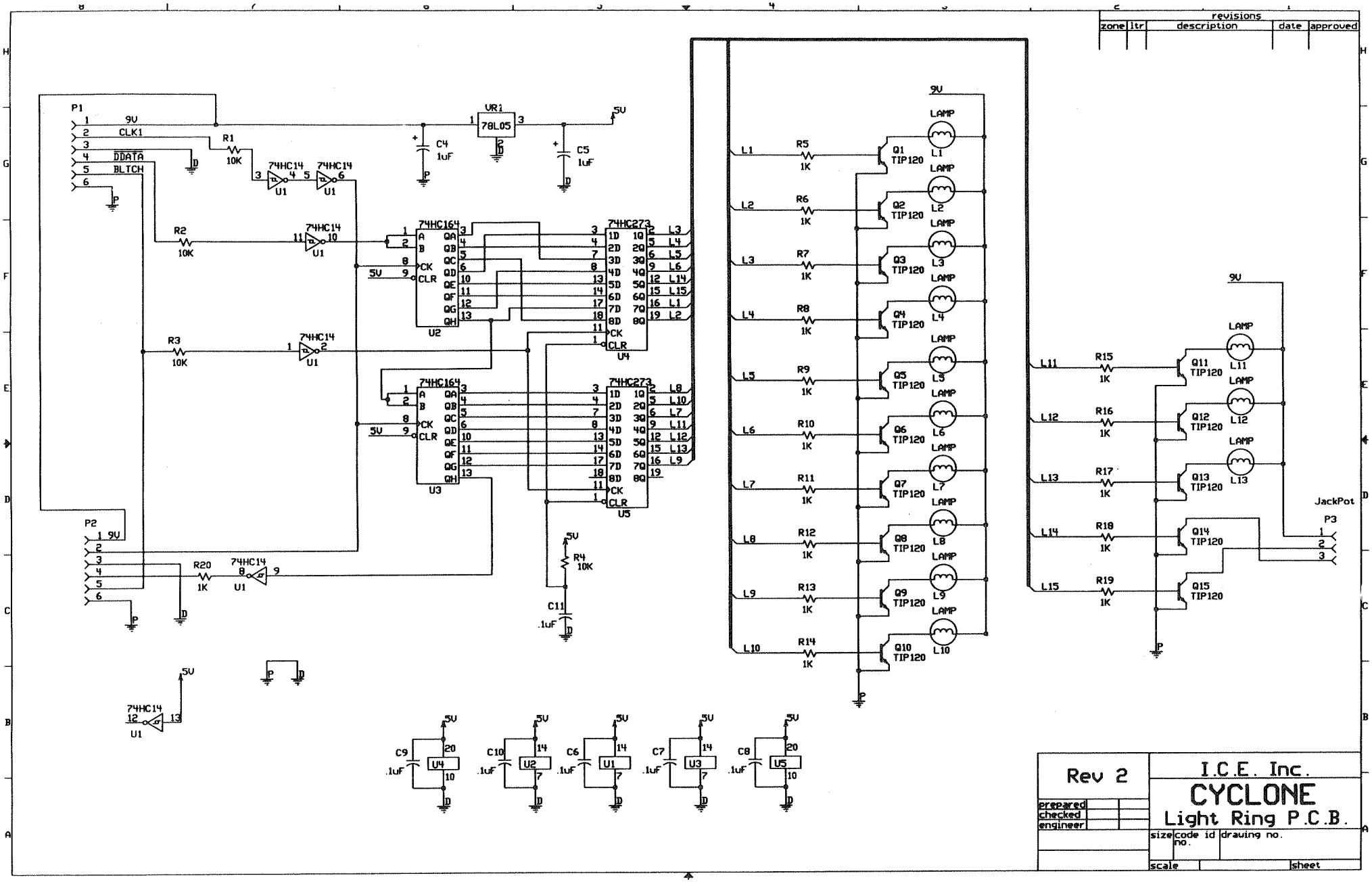
revisions
zone
ltr
description
date
approved
P1
9V
CLK1
DDATA
BLTCH
R1
10K
74HC14
U1
VR1
78L05
C4
1uF
C5
1uF
5V
R2
10K
R3
10K
74HC164
U2
U3
74HC273
U4
U5
R4
10K
C11
.1uF
P2
R20
1K
C9
C10
C6
C7
C8
LAMP
L1
L2
L3
L4
L5
L6
L7
L8
L9
L10
L11
L12
L13
L14
L15
R5
R6
R7
R8
R9
R10
R11
R12
R13
R14
R15
R16
R17
R18
R19
Q1 TIP120
Q2 TIP120
Q3 TIP120
Q4 TIP120
Q5 TIP120
Q6 TIP120
Q7 TIP120
Q8 TIP120
Q9 TIP120
Q10 TIP120
Q11 TIP120
Q12 TIP120
Q13 TIP120
Q14 TIP120
Q15 TIP120
JackPot
P3
Rev 2
prepared
checked
engineer
I.C.E. Inc.
CYCLONE
Light Ring P.C.B.
size
code id no.
drawing no.
scale
sheet

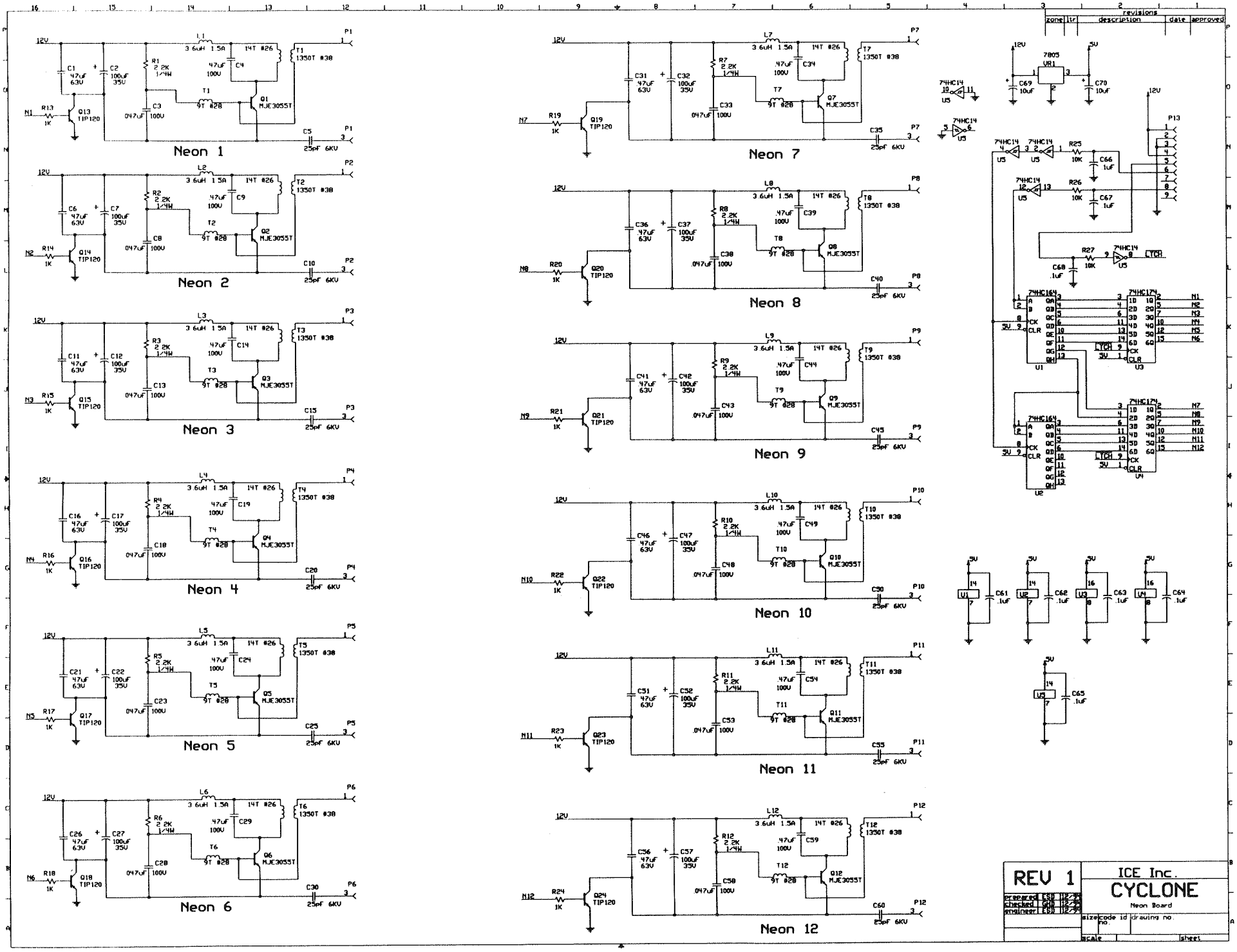
Neon 1
Neon 2
Neon 3
Neon 4
Neon 5
Neon 6
Neon 7
Neon 8
Neon 9
Neon 10
Neon 11
Neon 12
12V
L1 3.6uH 1.5A
14T #26
T1 1350T #38
R1 2.2K 1/4W
T1 9T #28
Q1 MJE3055T
C1 47uF 63V
C2 100uF 35V
C3 .047uF 100V
C4 47uF 100V
C5 25pF 6KV
N1 R13 1K
Q13 TIP120
P1
L2 3.6uH 1.5A
T2 1350T #38
R2 2.2K 1/4W
T2 9T #28
Q2 MJE3055T
C6 47uF 63V
C7 100uF 35V
C8 .047uF 100V
C9 47uF 100V
C10 25pF 6KV
N2 R14 1K
Q14 TIP120
P2
L3 3.6uH 1.5A
T3 1350T #38
R3 2.2K 1/4W
T3 9T #28
Q3 MJE3055T
C11 47uF 63V
C12 100uF 35V
C13 .047uF 100V
C14 47uF 100V
C15 25pF 6KV
N3 R15 1K
Q15 TIP120
P3
L4 3.6uH 1.5A
T4 1350T #38
R4 2.2K 1/4W
T4 9T #28
Q4 MJE3055T
C16 47uF 63V
C17 100uF 35V
C18 .047uF 100V
C19 47uF 100V
C20 25pF 6KV
N4 R16 1K
Q16 TIP120
P4
L5 3.6uH 1.5A
T5 1350T #38
R5 2.2K 1/4W
T5 9T #28
Q5 MJE3055T
C21 47uF 63V
C22 100uF 35V
C23 .047uF 100V
C24 47uF 100V
C25 25pF 6KV
N5 R17 1K
Q17 TIP120
P5
L6 3.6uH 1.5A
T6 1350T #38
R6 2.2K 1/4W
T6 9T #28
Q6 MJE3055T
C26 47uF 63V
C27 100uF 35V
C28 .047uF 100V
C29 47uF 100V
C30 25pF 6KV
N6 R18 1K
Q18 TIP120
P6
L7 3.6uH 1.5A
T7 1350T #38
R7 2.2K 1/4W
T7 9T #28
Q7 MJE3055T
C31 47uF 63V
C32 100uF 35V
C33 .047uF 100V
C34 47uF 100V
C35 25pF 6KV
N7 R19 1K
Q19 TIP120
P7
L8 3.6uH 1.5A
T8 1350T #38
R8 2.2K 1/4W
T8 9T #28
Q8 MJE3055T
C36 47uF 63V
C37 100uF 35V
C38 .047uF 100V
C39 47uF 100V
C40 25pF 6KV
N8 R20 1K
Q20 TIP120
P8
L9 3.6uH 1.5A
T9 1350T #38
R9 2.2K 1/4W
T9 9T #28
Q9 MJE3055T
C41 47uF 63V
C42 100uF 35V
C43 .047uF 100V
C44 47uF 100V
C45 25pF 6KV
N9 R21 1K
Q21 TIP120
P9
L10 3.6uH 1.5A
T10 1350T #38
R10 2.2K 1/4W
T10 9T #28
Q10 MJE3055T
C46 47uF 63V
C47 100uF 35V
C48 .047uF 100V
C49 47uF 100V
C50 25pF 6KV
N10 R22 1K
Q22 TIP120
P10
L11 3.6uH 1.5A
T11 1350T #38
R11 2.2K 1/4W
T11 9T #28
Q11 MJE3055T
C51 47uF 63V
C52 100uF 35V
C53 .047uF 100V
C54 47uF 100V
C55 25pF 6KV
N11 R23 1K
Q23 TIP120
P11
L12 3.6uH 1.5A
T12 1350T #38
R12 2.2K 1/4W
T12 9T #28
Q12 MJE3055T
C56 47uF 63V
C57 100uF 35V
C58 .047uF 100V
C59 47uF 100V
C60 25pF 6KV
N12 R24 1K
Q24 TIP120
P12
7805 VR1
C69 10uF
C70 10uF
74HC14 U5
R25 10K
R26 10K
R27 10K
C66 .1uF
C67 .1uF
C68 .1uF
LTCH
P13
74HC164 U1
74HC164 U2
74HC174 U3
74HC174 U4
5V
C61 .1uF
C62 .1uF
C63 .1uF
C64 .1uF
C65 .1uF
N1 N2 N3 N4 N5 N6
N7 N8 N9 N10 N11 N12
revisions
zone ltr description date approved
REV 1
ICE Inc.
CYCLONE
Neon Board
prepared
checked
engineer
size code id no. drawing no.
scale
sheet

Cyclone Transformer Specifications

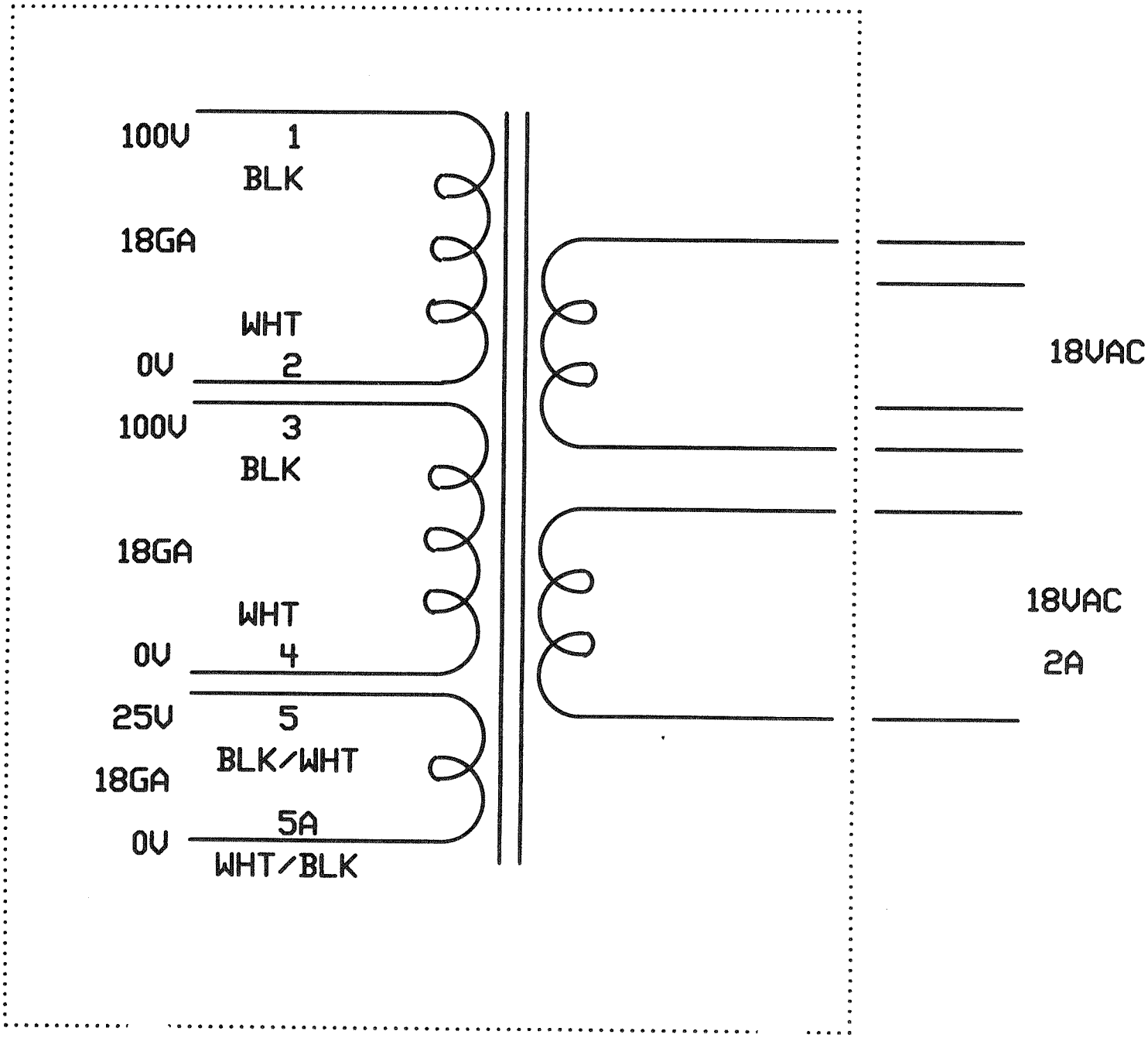

TRANSFORMER CABLE

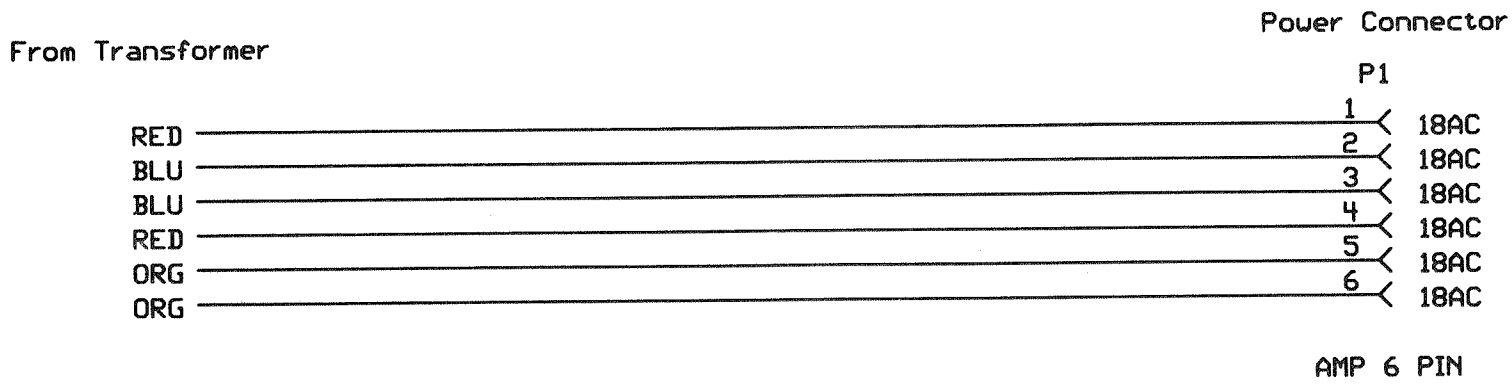

PARTS LISTINGS

MECHANICAL PARTS

CC1001	Cabinet speaker panel
CC1007	Main P.C. Board mounting bracket
CC1008	Cash box enclosure
CC1009	Power module mounting plate
CC1010	Top panel overlay (BLUE, LEFT)
CC1011	Top panel overlay (BLUE, RIGHT)
CC1012	Top panel overlay (BLUE, CENTER)
CC1013	Top panel overlay (PINK, LEFT)
CC1014	Top panel overlay (PINK, RIGHT)
CC1015	Top panel overlay (PINK, CENTER)
CC1016	Top panel overlay (GREEN, LEFT)
CC1017	Top panel overlay (GREEN, RIGHT)
CC1018	Top panel overlay (GREEN, CENTER)
CC1019	Scoreboard mounting bracket
CC1021	Coin funnel mounting bracket
CC1022	Cabinet door frame (BLUE)
CC1023	Cabinet door frame (PINK)
CC1024	Cabinet door frame (GREEN)
CC1025	Cash door frame (BLUE)
CC1026	Cash door frame (PINK)
CC1027	Cash door frame (GREEN)
CC1028	Cabinet coin door (BLUE)
CC1029	Cabinet coin door (PINK)
CC1030	Cabinet coin door (GREEN)
CC1032	Cash box door (BLUE)
CC1033	Cash box door (PINK)
CC1034	Cash box door (GREEN)
CC1035	Scoreboard housing (BLUE)
CC1036	Scoreboard housing (PINK)
CC1037	Scoreboard housing (GREEN)
HH3001	Dome
CC3002X	Control panel assembly
CC3003	Playfield
CC3004	Mirror
CC3005	Mirror back (Melamine)
CC3007	Power module enclosure
CC3010	Cabinet bottom plate (Melamine)
CC3011	Cabinet top plate (Melamine)
CC3012	Plastic cash box
CC3013	Coin funnel
CC3014	Cabinet vertical member
CC3015	Top plate support

ELECTRICAL / ELECTRONIC PARTS

CC2001	Transformer, Neon
CC2002	Transformer, Game
CC7005X	Storm stopper button
CC2006	Jackpot light (Housing & Amber cover)
CC2007	Inductor 3.6uH 1.5 amp neon choke
CC2008	Main P.C. Board heat sink
CC2016	Neon arch socket nut (Plastic)
CC2017	Neon Arch socket
CC2018	Neon Arch (PINK)
CC2019	Neon Arch (GREEN)
CC2020	Neon Arch (BLUE)
CC2021	Neon Triangle (PINK)
CC2022	Neon Triangle (GREEN)
CC2023	Neon Triangle (BLUE)
CC2335	Ring Board Bulb Socket
2005	Light Ring Bulb (playfield) #906
2061	Jackpot light bulb #81
2110	Transistor, TIP120
2117	IC 74HC14
2124	IC LM358
2237	IC 74HC4066 Bilateral Switch
2250	IC 74HC138
2253	IC 74HC374
2254	IC Audio amplifier TDA2002H
2262	IC 74HC174
2266	IC 74HC237 Latching Output Decoder
2297	IC 74HC00
2299	IC 74HC373
2301	IC 74HC165
2305	IC 74HC273
2320	Game Program E-Prom
2364	Heat sink fan
2368	IC MC68HC11A1P Microprocessor
2411	IC LM78L05ACZ 5%V
2417	IC 74HC164
2444	Bridge Rectifier 35Amp (wire leads)
2519	6800uf Capacitor 25V radial
2520	6800uf Capacitor 35V radial
2521	22000uf Capacitor 35V radial
208004	IC ULN2003A Driver
208009	IC LM338K Voltage Regulator
276	Display MAN6910
2518	Display, Dual 7 Segment
2523	IC LM307N OP Amp
PC20224	Counter 12 volt
PC20407	Battery - 3.2 volt (BR2032)
PC20435	IC LM340T-5 (7805) voltage regulator
CC2005X	Jackpot P.C. Board
CC2020X	Neon Transformer P.C. Board
CC2032X	Tickets Owed (control panel) P.C. Board
CC2033X	Jackpot Display P.C. Board
CC2034X	Main P.C. Board

HARDWARE & MISC.

5014	Coin door lock
PC60615A	#2 Square Drive Bit
FP1004	Leg leveler mounting bracket
FP1019	Leveler Feet
FP2007	Speaker
HH2027	Power Cord

GRAPHICS

CC7001	Cyclone - cabinet decal
CC7002	By I.C.E. - decal
CC7004	Control panel overlay
CC7005	Storm Stopper - button decal
CC7006	Scoreboard overlay
CC7007	Programming decal
CC7008	Fuse rating / power disconnect warning
CC7011	Playfield zone decal - right
CC7012	Playfield zone decal - left
CC7013	Playfield JACKPOT decal
CC7014	Alternate zone number decal sheet
CC9001	Service Manual

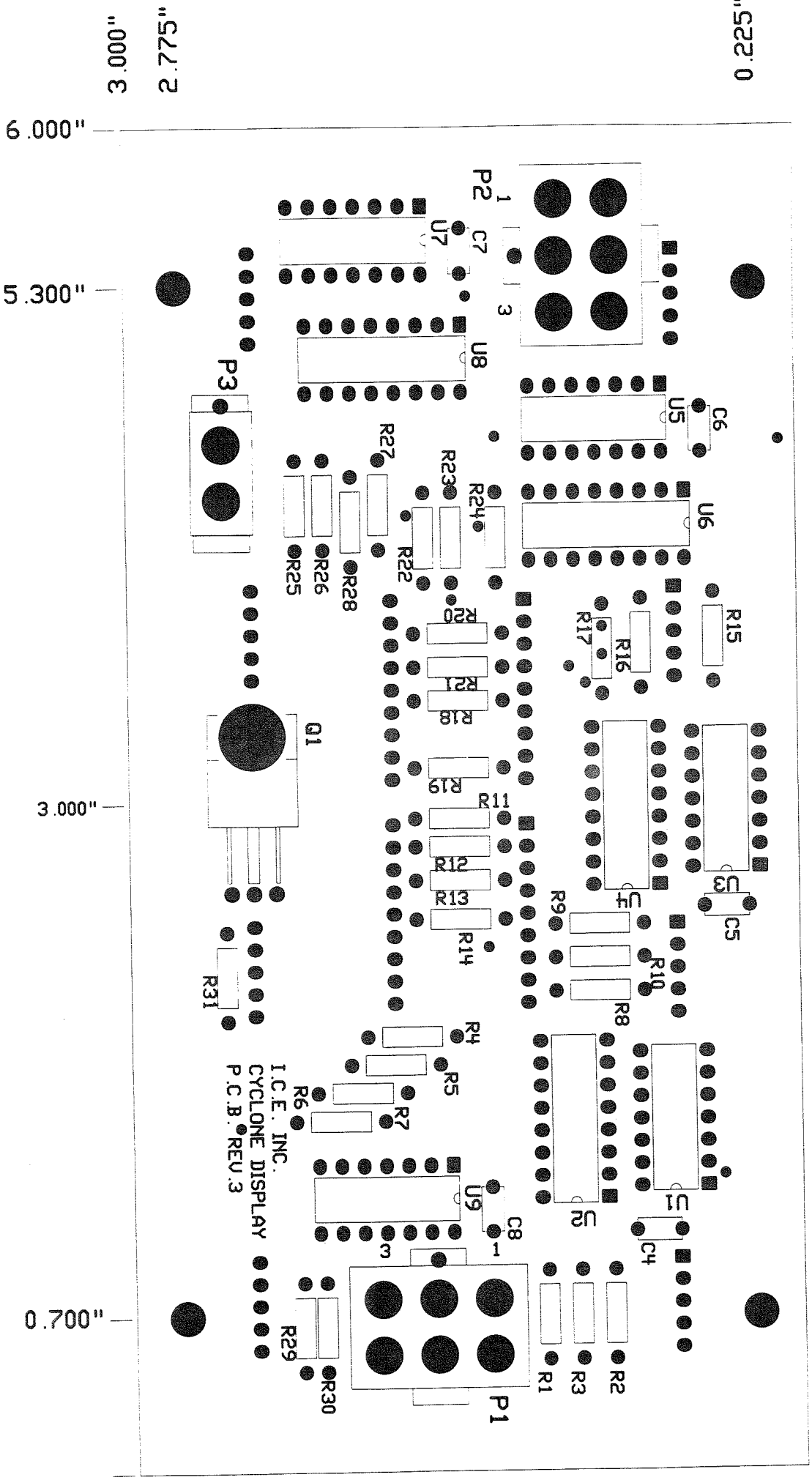
3.000"
2.775"
0.225"
6.000"
5.300"
3.000"
0.700"
P2
U7
C7
U8
P3
U5
C6
R27
R23
R24
U6
R25
R26
R28
R22
R20
R17
R16
R15
R21
R18
Q1
R19
R11
R12
R13
R14
U4
U3
C5
R9
R10
R8
R31
R4
R5
R6
R7
I.C.E. INC.
CYCLONE DISPLAY
P.C.B. REV.3
U9
C8
U2
U1
C4
R29
R30
P1
R1
R3
R2

STATION CABLE

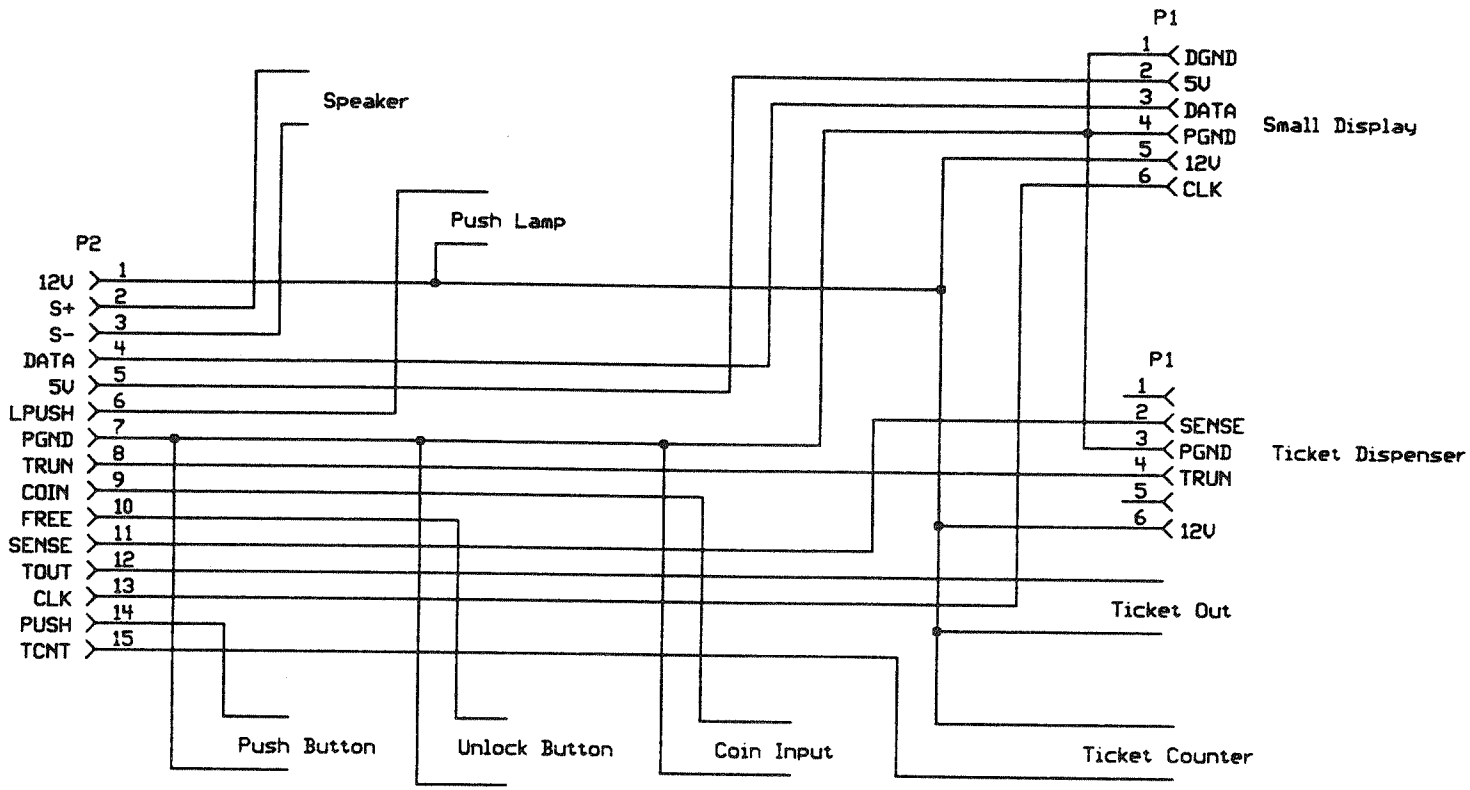

RING\CPU CABLE

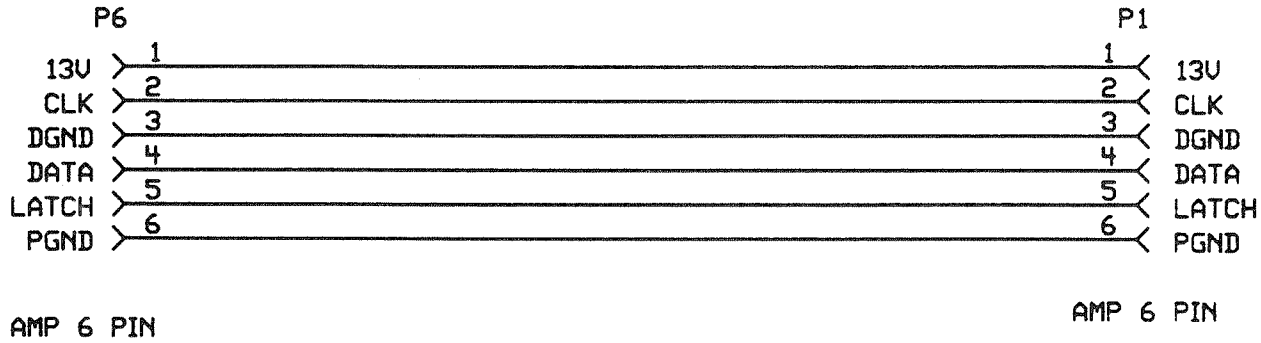

JACKPOT CABLE

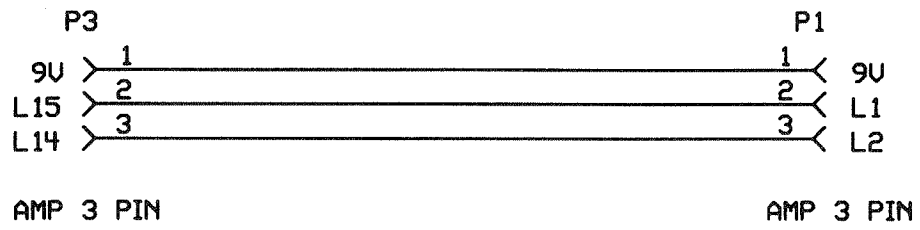

DISPLAYS INTERCONNECT

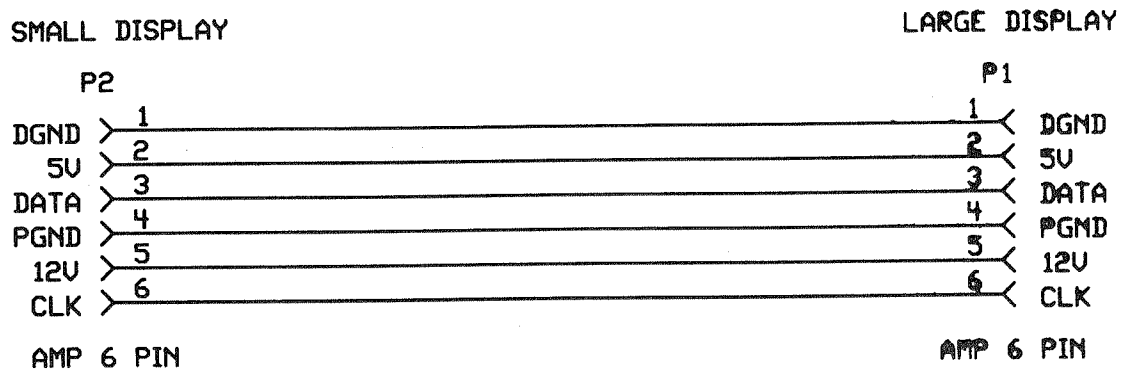

Coin Counter Harness

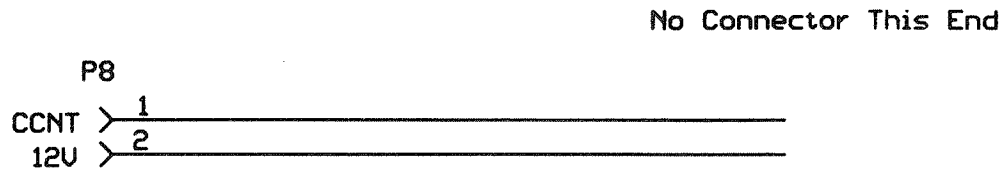

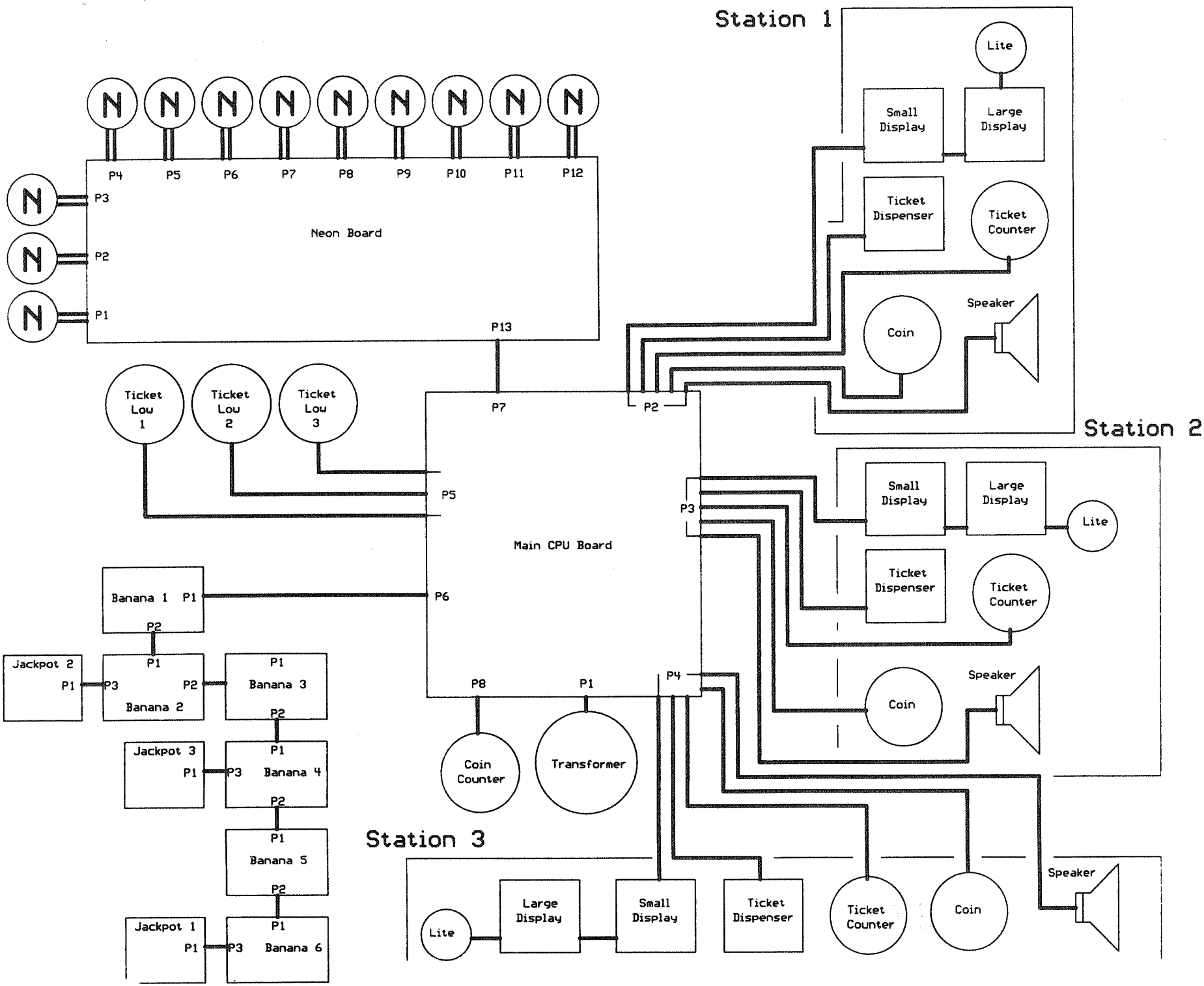
Station 1
Lite
Small Display
Large Display
Ticket Dispenser
Ticket Counter
Coin
Speaker
Neon Board
P1
P2
P3
P4
P5
P6
P7
P8
P9
P10
P11
P12
P13
Ticket Low 1
Ticket Low 2
Ticket Low 3
Main CPU Board
Station 2
Small Display
Large Display
Lite
Ticket Dispenser
Ticket Counter
Coin
Speaker
Banana 1
Banana 2
Banana 3
Banana 4
Banana 5
Banana 6
Jackpot 1
Jackpot 2
Jackpot 3
Coin Counter
Transformer
Station 3
Lite
Large Display
Small Display
Ticket Dispenser
Ticket Counter
Coin
Speaker

Neon Harness Cable

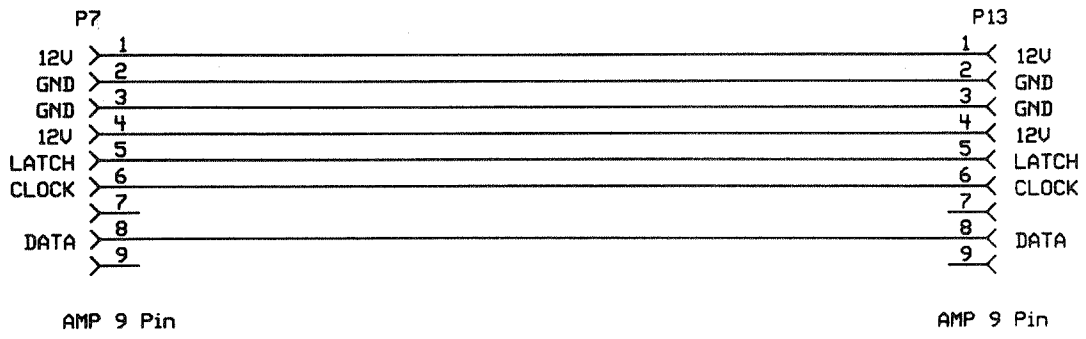

LIGHT RING INTERCONNECT

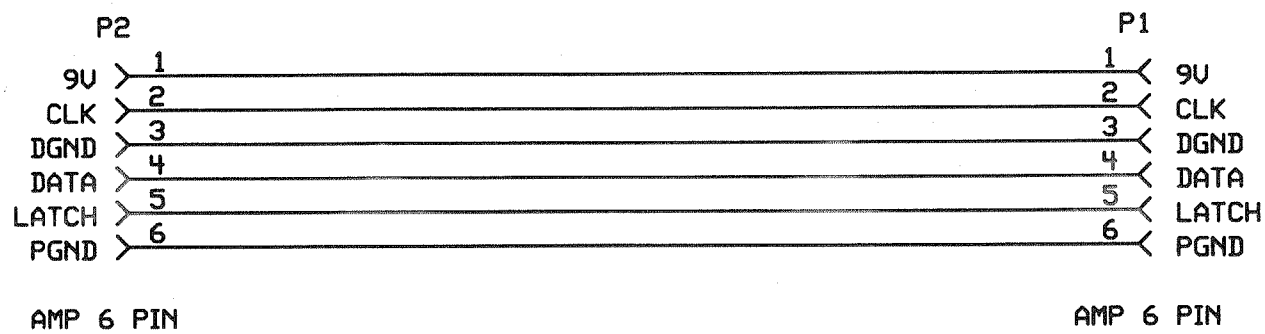

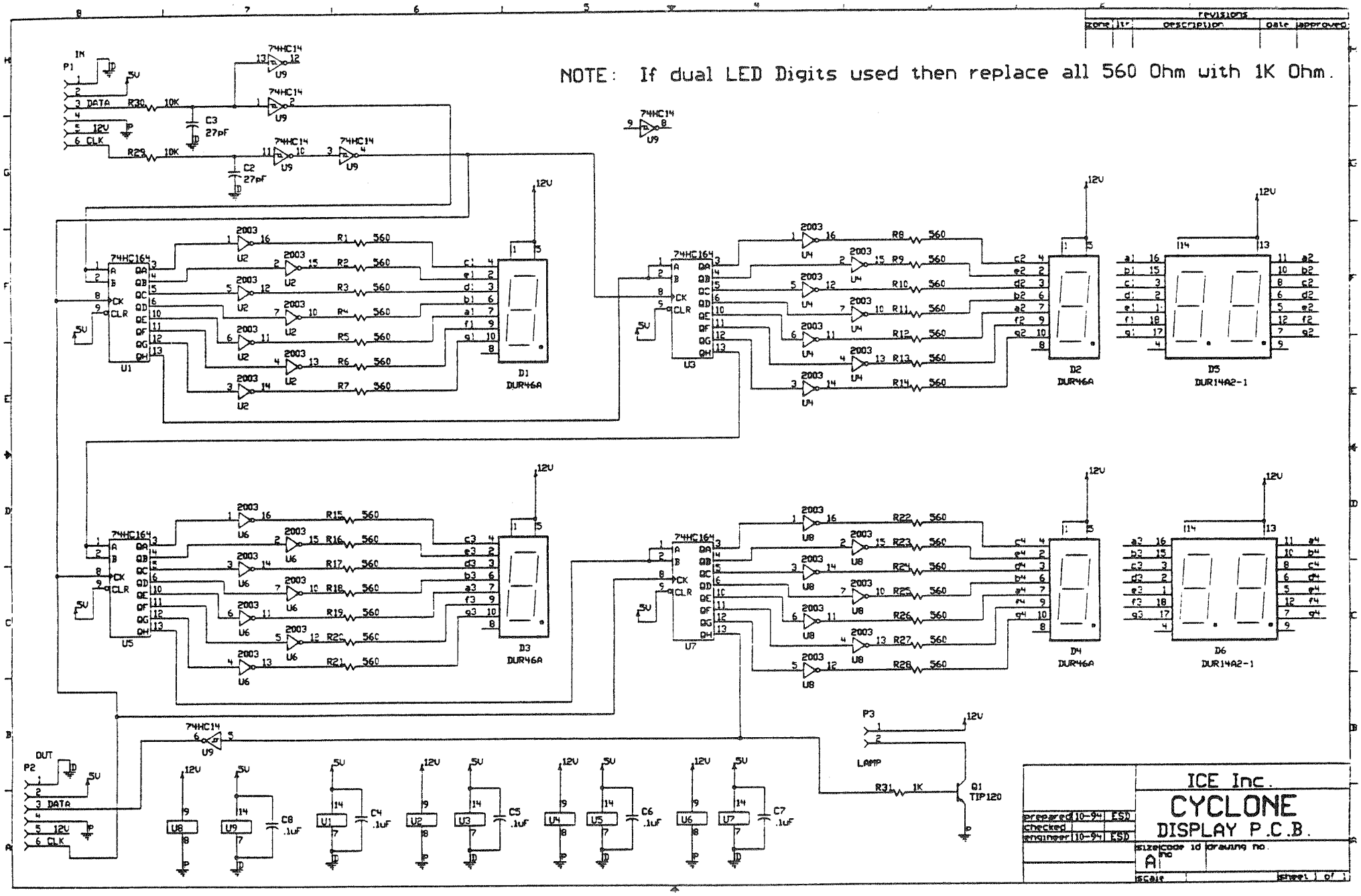
NOTE: If dual LED Digits used then replace all 560 Ohm with 1K Ohm.
revisions
zone | ltr | description | date | approved
IN
P1
DATA
CLK
12V
5V
R30 10K
R29 10K
C3 27pF
C2 27pF
74HC14
U9
74HC164
U1
U3
U5
U7
2003
U2
U4
U6
U8
R1 560
R2 560
R3 560
R4 560
R5 560
R6 560
R7 560
R8 560
R9 560
R10 560
R11 560
R12 560
R13 560
R14 560
R15 560
R16 560
R17 560
R18 560
R19 560
R20 560
R21 560
R22 560
R23 560
R24 560
R25 560
R26 560
R27 560
R28 560
D1 DUR46A
D2 DUR46A
D3 DUR46A
D4 DUR46A
D5 DUR14A2-1
D6 DUR14A2-1
OUT
P2
P3
LAMP
R31 1K
Q1 TIP120
C4 .1uF
C5 .1uF
C6 .1uF
C7 .1uF
C8 .1uF
ICE Inc.
CYCLONE
DISPLAY P.C.B.
prepared 10-94 ESD
checked
engineer 10-94 ESD
size code id drawing no.
A
scale
sheet 1 of 1

Warranty

I.C.E. warrants all components in the CYCLONE game, to be free of defects in material and workmanship for a period of ninety days from the date of purchase.

This warranty does not cover items damaged due to normal wear and tear, subjected to abuse, improperly assembled, modified, repaired, or operated in a fashion other that described in the service manual.

If your CYCLONE game fails to conform to the above mentioned warranty, I.C.E.'s sole liability shall be, at its' option, to repair or replace any defective component with a new or remanufactured component of equal to or greater O.E.M. specification.

I.C.E. will assume no liability whatsoever, for costs associated with labor to replace defective parts, or travel time associated therein.

I.C.E.'s obligation will be to ship free of charge, replacement parts by UPS ground, U.S. Mail, or other comparable shipping means. Any Express Mail or Overnight shipping expense is at the cost of the purchaser.

Products will be covered under the warranty only when:

1. The serial number of the game with the defective part is given.

2. The serial number of the defective part, if applicable, is given.

3. Defective parts are returned to I.C.E., shipping prepaid, in a timely fashion, if requested by I.C.E.

4. A copy of the sales receipt is available as proof of purchase upon request of I.C.E.

I.C.E. distributors are independent, privately owned and operated. In their judgment, they may sell parts or accessories other than those manufactured by I.C.E. We can not be responsible for the quality, suitability, or safety of any non-I.C.E. part, or any modification, including labor, which is performed by such distributor.

GAME SET-UP / TESTING

CEC
CYC Jr.

MODE 8-33 (ZONE VALUES)

The play field consists of 66 lights, 26 of which make up the play zone. In the center of the play zone lies the "Jackpot" where a large amount of tickets could be won. Each light, in the play zone, has a point value associated with it. Each light can be independently set for a point value different from the factory set default value for that zone. Each lights is a separate "zone".

Listed on the table below are the 26 zones and the associated "mode" number for each. Zone 1 is the furthest zone from the Jackpot to the right, while zone 26 is the furthest from the Jackpot to the left. Also in this table, are the default values for each zone.

LIGHT RING ZONE VALUES

MODE	ZONE	DEFAULT
8	1	1
9	2	2
10	3	2
11	4	3
12	5	3
13	6	4
14	7	4
15	8	5
16	9	5
17	10	6
18	11	7
19	12	8
20	13	10
21	14	10
22	15	8
23	16	7
24	17	6
25	18	5
26	19	5
27	20	4
28	21	4
29	22	3
30	23	3
31	24	2
32	25	2
33	26	1

For each zone a value from 0 to 20 can be set. If the values are changed from the factory default settings, it will be necessary to change the numbers indicated on the play zone by using the supplied decal overlay sheets.

MODE 34 (JACKPOT DIFFICULTY)

To make the game easier or harder to win, this mode should be adjusted.

The value displayed is equal to how many half milliseconds the "WINDOW" to win the Jackpot is open. (A half millisecond is 1/2000 of a second.) A setting of "1" is the hardest (equal to 1/2 millisecond), and a setting of "40" is the easiest (equal to 20 milliseconds). The remainder of the lights in the play field have a factory set value of 20 milliseconds. The default value for this mode is "6".

MODE 35 (JACKPOT WINDOW)

This mode adds a valuable feature to those locations that have large variations in age groups. Under normal circumstances, the operator sets up MODE 34 for the best payout for his location. However this may be to difficult for some age groups. There are also circumstances where the operator may want the Jackpot to be won on an average of XXX amount of games. This mode will allow for that. When this mode is selected, no matter what window value is set at in MODE 34, the game will open a window, programmable from 1/2 millisecond (hardest) to 20 milliseconds (easiest), every XXX games. Every XXX games, is the number you choose on this setting. A setting of "0" turns this mode off. The default setting for this mode is "0".

MODE 36 (JACKPOT LOCK-UP)

This mode allows the operator the choice of whether or not to dispense tickets when the Jackpot is hit.

If the operator normally sets the Jackpot to a very high value, he/she may not wish to dispense tickets when the Jackpot is hit. If the game is set to a lower Jackpot, it is a good idea to let the game dispense tickets by itself.

It is usually better to let the game dispense tickets, as part of the fun in the game is watching all those tickets come out when the Jackpot is hit. It also attracts attention to the game, promoting further game play by others in the general area.

Setting a "0" dispenses tickets. Setting a "1" does not allow tickets to dispense when the Jackpot is hit. The default value for this mode is "0"

NOTE: WHEN THE GAME IS SET NOT to DISPENSE TICKETS, THE TICKET DISPENSER RESET BUTTON MUST BE PRESSED FOR THE GAME TO RESUME DISPENSING ANY TICKETS. THE RESET BUTTON IS CONVENIENTLY LOCATED ON THE COIN MECH HOLDER.

GAME SET-UP / TESTING

CEC
CYC jr,

OPTION MODES

Please read the setting information carefully BEFORE making any adjustments. Failure to set options properly can yield unexpected results.

PLEASE NOTE: THE VALUES PRE-SET AT THE FACTORY HAVE BEEN FOUND TO WORK BEST FOR MOST LOCATIONS.

MODE 0 (VOLUME)

The number set in this mode controls the relative volume of the sound. "0" equals minimum, "9" equals maximum. As this button is pushed, a sound is played to make it easier to determine where the volume should be set. The default value for this mode is "3".

NOTE: THE SOUND IN THIS GAME CANNOT BE COMPLETELY TURNED OFF.

MODE 1 (COINS PER CREDIT 1)

The number set in this mode, is the number of coins necessary to earn 1 credit, and play 1 game. Setting a "0" in this mode will set the game in "Free Play" mode. The default for this mode is "1".

MODE 2 (COINS PER CREDIT 2)

This is an extra mode used to create a change in currency for games not sold in the United States.

MODE 3 (COINS PER CREDIT 3)

This is an extra mode used to create a change in currency for games not sold in the United States.

MODE 4 (COINS PER CREDIT 4)

This is an extra mode used to create a change in currency for games not sold in the United States.

MODE 5 (MULTICREDITS)

The number set in this mode is the number of credits that will be associated with each coin received.

Example: If this option is set to "2" then for every coin received there will be "2" credits given. If this option is set to "4" then for every coin received there will be "4" credits given.

The default value for this option is "1".

MODE 6 (CREDIT DISCOUNTING)

When this mode is enabled, the game will give you 1 free credit for every XXX coins inserted into the game AT ONE TIME. A setting of "0" turns this mode off.

Example: If "2" is chosen, for every 2 coins inserted, 1 free game will be given. If "4" is chosen, for every 4 coins inserted, 1 free game will be given.

The default value for this option is "0".

MODE 7 (ATTRACT MODE)

The attract mode consists of a sound used during the game being played whenever called to do so by the game program. The numbers in this mode represent minutes between attract modes. Setting a "0" in this mode turns the attract mode off. The default value in this mode is 3.

GAME SET-UP / TESTING

CEC
CYC jr.

PROGRAMMING YOUR GAME

This section will give you a detailed explanation on the functions and operating characteristics of each of the programming buttons. Please read this section carefully to avoid problems with your game.

NOTE: THE PROGRAMMING BUTTONS ARE LOCATED ON THE LOWER LEFT SIDE OF THE MAIN P.C. BOARD.

PROGRAMMING BUTTON (SW1)

This button is used to enter the "Programming" mode. It is located on the Main P.C. Board in the lower left hand corner. Press this button once to enter the programming mode.

Once in this mode you can push SW2 to select modes 1-44, then use SW3 or SW4 to move up or down in numbers within the chosen mode.

To exit the programming mode and return to game play, push SW1 again.

SELECT BUTTON (SW2)

This button is used to advance through all the programming modes. Each push of this button, will move you to the next programmable mode. The mode number will be displayed in the "CREDITS" display on the scoreboard.

STEP UP BUTTON (SW3)

Each push of this button will advance you to the next available "value" for a particular programmable mode. The value for that mode is shown on the "JACKPOT" display located on the scoreboard.

STEP DOWN BUTTON (SW4)

Each push of this button will back you up to the previous "value" for a particular programmable mode. The value for that mode is shown on the "JACKPOT" display located on the scoreboard.

SELF TEST MODE (SW5)

This mode was used in the prototype testing of the game and has no significance in the operation of this game.

AUDIO MODE (SW6)

This button is used to test the sounds the game makes during game play. Each push of the button will produce a new sound, used during game play, until all sounds have been heard, then it will repeat.

SET-UP / DETAILED PROGRAMMING CA

OPTION #9
ATTRACT TIME

This option determines how long a period of time transpires BETWEEN attract modes. The range for this option is 0-30 (0-30 minutes). Setting a "0" turns the attract mode OFF. The default value for this option is "3" (once every 3 minutes).

OPTION #10
ATTRACT TYPE

This option determines which TYPE of attract mode will be performed. The range for this option is 1-3.

1= Sound Only
2= Motion Only
3= Sound AND Motion

The default value for this option is "3" (both)

OPTION #11
EGG DROP DELAY

When a gondola is empty, a sensor sees that it is empty and sends a signal to the game computer to dispense an egg. The positioning of the sensor requires a delay between the sensing and the dispensing of the egg. Since there are mechanical variations from motor to motor, the drop delay time might not be the same from game to game. Also, as the game gets older, the gears wear in and the internal mechanical resistance in the gear box goes down making it run faster. To compensate for this, the delay time is adjustable.

- If the eggs drop too soon, increase the value of the option. If the eggs drop too late, decrease the value of the option. The range for this option is 5-15 (5-15 milliseconds. The default value for this option is "10"

OPTION #12
FACTORY RESET

This option will reset ALL programming options to their factory default values at one time. The range for this option is 0-1. Setting a "1" will reset all values. The default value for this option is "0".

SET-UP / DETAILED PROGRAMMING CA

OPTION #2
COIN 1

This option determines how many coins it takes to earn 1 credit (or play 1 game). The range for this option is 0-10. Setting a "0" puts the game into FREE PLAY mode. The default value for this option is "1"

OPTION #3
COIN 2

This option determines how many COIN #1's it takes to earn a credit (or play 1 game). This option is used for special instances where a different value of coin is needed.

NOTE: FOR MOST APPLICATIONS LEAVE THE OPTION SET AT "1". FOR OTHER APPLICATIONS, PLEASE CALL OUR SERVICE DEPARTMENT FOR ASSISTANCE. Setting a "0" turns this coin mech OFF.

OPTION #4
COIN / CREDIT COUNTER

This option determines whether the game counter will register individual coins or credits (games played). The range for this option is 0-1. Setting a "0" sets the game up to work on coins. Setting a "1" sets the game to work on credits. The default value for this option is "1".

OPTION #5
HITS PER DISPENSE

This option determines how many eggs must be scored before a "dispense command" is given. This option is handy if you have a high ticket value and you wish to dispense fewer tickets.

EXAMPLE: You could set this option to 5, and option #6 to "1". This would mean that each time you scored 5 eggs, you would get 1 ticket.

The range for this option is 1-10. The default value for this option is "1". (1 ticket per egg scored)

OPTION #6
TICKETS PER DISPENSE

This option determines how many tickets are paid out each time the "dispense command" is given. This option is handy where the ticket value is very low and you wish to give away more tickets than you normally could.

This option also allows for some interesting possibilities for ticket payouts. EXAMPLE: Lets say you wanted to pay out 10 tickets BUT ONLY if the player got 8 eggs. By setting option #5 to 8, and this option to 10, you would pay out 10 tickets for every 8 eggs hit.

The range for this option is 1-10. The default value for this option is "1" (1 ticket per dispense command, or egg)

OPTION #7
JUST FOR PLAYING

This option is handy for giving out tickets "just for playing" the game. This is handy when the kids playing are very young or not talented and have a hard time scoring. This assures the customer will walk away with a pre-determined minimum amount of tickets. This is also handy in jurisdictions that insist on a guaranteed payout.

The range for this option is 0-10. Setting a "0" turns this option OFF. The default value for this option is 2. (2 ticket minimum)

OPTION #8
TICKET CAP

This option limits the amount of tickets that can be paid out. For instance, you may wish to have a long game time to assure that younger players have a lot of fun and can get tickets, but you don't want to overpay with older more skilled players. By enabling the ticket cap, you can determine the maximum amount of tickets you will pay out. The range of this option is 0-99. Setting a "0" turns this option OFF. The default value for this option is "0". (Off)

SET-UP / DETAILED PROGRAMMING CA

SAFETY PRECAUTIONS

WARNING: WHEN INSTALLING THIS GAME, A 3 PRONG GROUNDED A.C. RECEPTACLE MUST BE USED. FAILURE TO DO SO COULD RESULT IN INJURY TO YOURSELF OR OTHERS. FAILURE TO USE A GROUNDED RECEPTACLE COULD ALSO CAUSE IMPROPER GAME OPERATION, OR DAMAGE TO THE ELECTRONICS

DO NOT DEFEAT OR REMOVE THE GROUNDING PRONG ON THE POWER CORD FOR THE SAME REASON AS GIVEN ABOVE. USING AN IMPROPERLY GROUNDED GAME COULD VOID YOUR WARRANTY.

HAVE A QUALIFIED ELECTRICIAN CHECK YOU'RE A.C. RECEPTACLE TO BE SURE THE GROUND IS FUNCTIONING PROPERLY.

PROGRAMMING YOUR GAME

This section will give you a detailed explanation of the functions and operating characteristics of each of the programming buttons.

PLEASE READ THIS SECTION CAREFULLY TO AVOID PROBLEMS WITH YOUR GAME.

PLEASE NOTE: THE PROGRAMMING BUTTONS ARE LOCATED INSIDE THE SLIDING DRAWER. ACCESS THESE BUTTONS BY REMOVING THE ALLEN BOLTS THAT SECURE THE DRAWER TO THE CABINET. THERE IS 1 BOLT ON EACH SIDE OF THE CABINET. AFTER REMOVING THE BOLTS, PULL OUT ON THE LOG CONTROL PANEL TO OPEN THE DRAWER.

PROGRAMMING INSTRUCTIONS

To enter programming, press the small black button located on the Main P.C. Board located between the 2 large edge connectors.

To change to the different game option numbers, press the "SELECT" button located on a bracket inside the game drawer. The option NUMBER will be seen on the "Egg Timer" display on the playfield. Press this button to scroll through the options.

To change to different option values, press the "STEP" button located on a bracket inside the game drawer. The option VALUE will be seen on the "Egg Counter" display on the playfield. Press this button to scroll through the option values

To exit the programming mode, press the programming button once again.

NOTE: To enter the TEST mode, press select button while holding down the step button. To exit the test mode, turn game power off and back on.

OPTION #0
VOLUME

This option determines how loud the game volume will be. The higher the number, the higher the volume. Setting a "0" turns the game sound off. The range for this option is 0-10. The default value for this option is "5"

OPTION #1
TIME

This option determines how long the time of the game is. The range of this option is 20-99 (20-99 seconds). The default value for this option is "20" (20 seconds).

Country Acre's

QUICK PROGRAMMING

To enter programming, press the small black button located on the Main P.C. Board located between the 2 large edge connectors.

To change to the different game option numbers, press the "SELECT" button located on a bracket inside the game drawer. The option NUMBER will be seen on the "Egg Timer" display on the playfield. Press this button to scroll through the options.

To change to different option values, press the "STEP" button located on a bracket inside the game drawer. The option VALUE will be seen on the "Egg Counter" display on the playfield. Press this button to scroll through the option values

To exit the programming mode, press the programming button once again.

NOTE: To enter the TEST mode, press select button while holding down the step button. To exit the test mode, turn game power off and back on.

Option	Description	Default value/ Max / Min	Notes
0	Volume	5 / 10 / 0	
1	Time	20 / 99 / 20	
2	Coin 1	1 / 10 / 0	0 = Free Play
3	Coin 2	1 / 10 / 0	0 = Off
4	Coin / Credit Counter	1 / 1 / 0	1 = Credit
5	Hits per Dispense	1 / 10 / 1	
6	Tickets per Dispense	1 / 10 / 1	
7	Just for Playing	2 / 10 / 0	
8	Ticket Cap	0 / 99 / 0	
9	Attract time	3 / 30 / 0 (minutes)	0 = Off
10	Attract Type	3 / 3 / 1	1 = Sound 2 = Motion 3 = Both
11	Egg Drop Delay	10 / 15 / 5	
12	Factory Reset	0 / 1 / 0	1 = Reset

GAME SET-UP / TESTING

CEC
CYC jr.

MODE 37 (JACKPOT BASE VALUE)

The value set in this mode, is the value of the Jackpot when the game is first powered up, or just after a Jackpot is won. The default value for this mode is "100".

MODE 38 (JACKPOT CAP)

The number shown in this mode is the maximum amount of tickets the game will dispense when the Jackpot is won. Setting a "0" turns the cap off. The default value for this mode is "500".

MODE 39 (STATION I.D.)

When more than one game is to be employed in a single location, it may be desirable to have the games linked so as to eliminate the chance of having one game more desirable than another due to the size of the "Jackpot". To synchronize the "Jackpot, the games must have different identification numbers. The numbers available are from 0-15. It doesn't matter which numbers you pick, or if the numbers are sequential or not, so long as each number is different. The default value for this mode is "15".

IMPORTANT: IF THE STATION I.D.'S ARE NOT SET PROPERLY, THE GAME WILL WORK STRANGELY, CAUSING MANY UNEXPECTED PROBLEMS.

MODE 40 (GAMES INCREMENT)

The number set in this mode is the number of games that will need to be played before an increase in the Jackpot base will take place. A setting of "0" for this option will cause the Jackpot to remain constant at the number set in MODE 37. The default value for this option is "1".

MODE 41 (JACKPOT INCREMENT)

The number set in this mode, is the amount the Jackpot value will increase by each time the game is played, and the Jackpot IS NOT WON. Setting a "0" for this mode will turn the incrementing feature off and cause the Jackpot to remain constant at the number set in MODE 37. The default value for this mode is "1".

MODE 42 (CREDITS OR COINS)

This mode allows the operator to choose weather coins or credits are being counted as coins are fed into the game. Setting this option to "0" counts credits while a setting of "1" will count coins. The default value for this option is "0".

MODE 43 (SAVE HIGH SCORE)

This mode allows the operator to choose weather the high score is retained after power down or if the high score will be reset to the Jackpot base value set in MODE 37. Setting this mode to "0" WILL NOT retain high score after power down. Setting this mode to "1" WILL retain the high score after power down. The default value for this option is "0".

MODE 44 (RESET DEFAULT)

When this mode is selected, the game will revert to all factory default settings.

SET "1" THEN EXIT PROGRAMMING MODE TO RESET ALL VALUES TO FACTORY DEFAULT.

The default value for this mode is "0".